FILTRE DE MICROUNDE

Transformari ale filtrului prototip

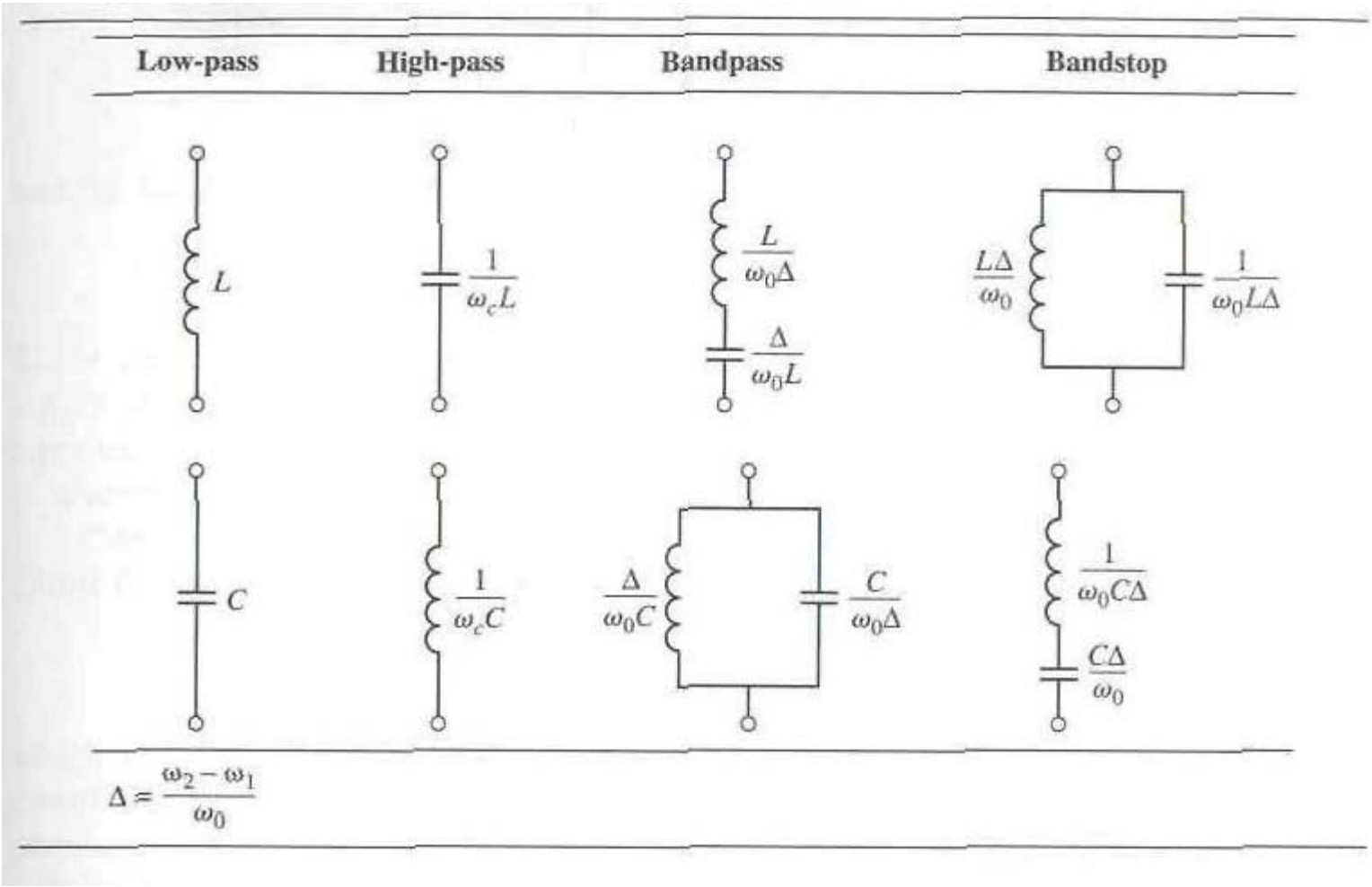

Raspuns filtru prototip maxim plat

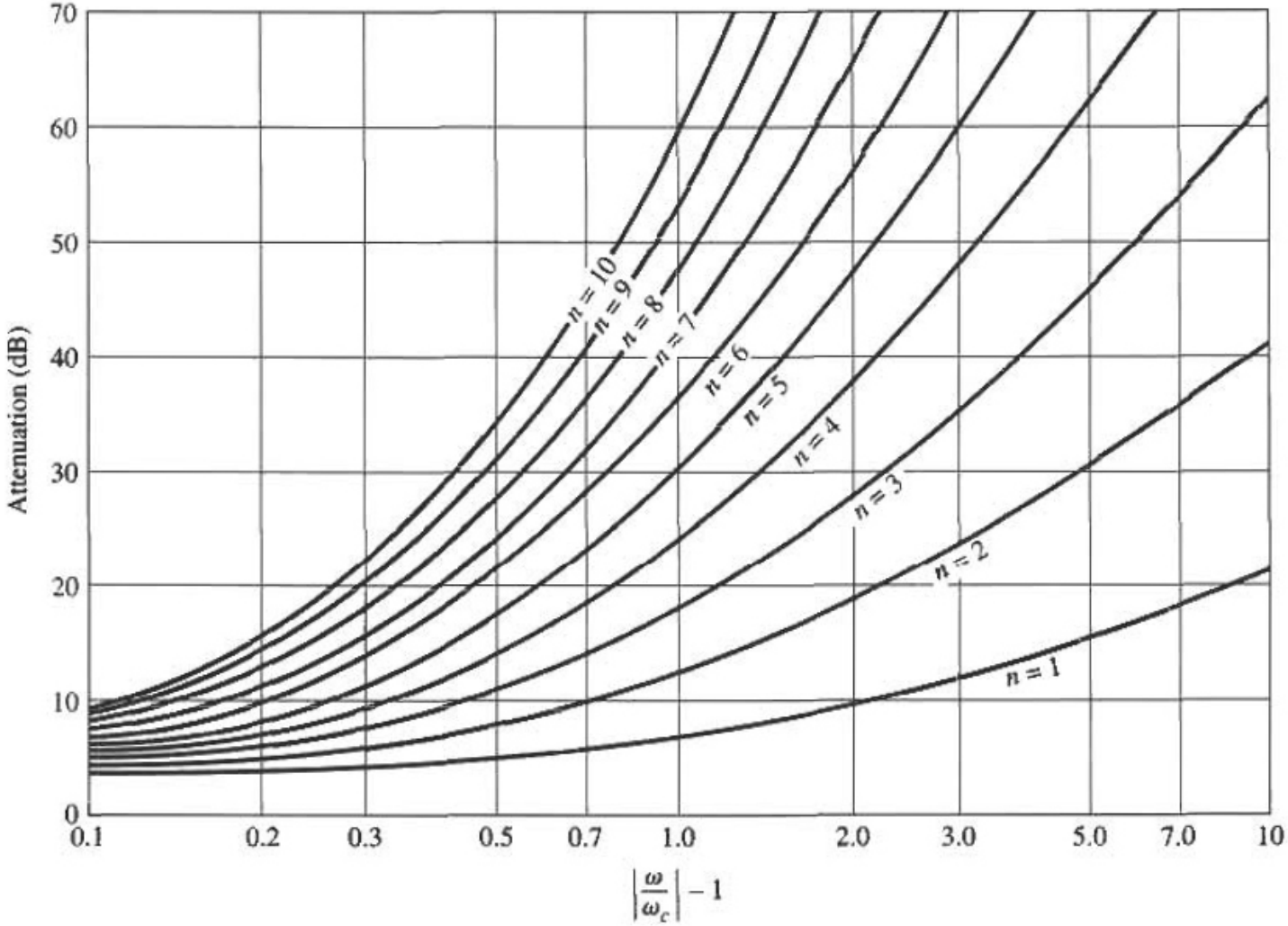

Raspuns filtru prototip echiriplu 0.5 dB

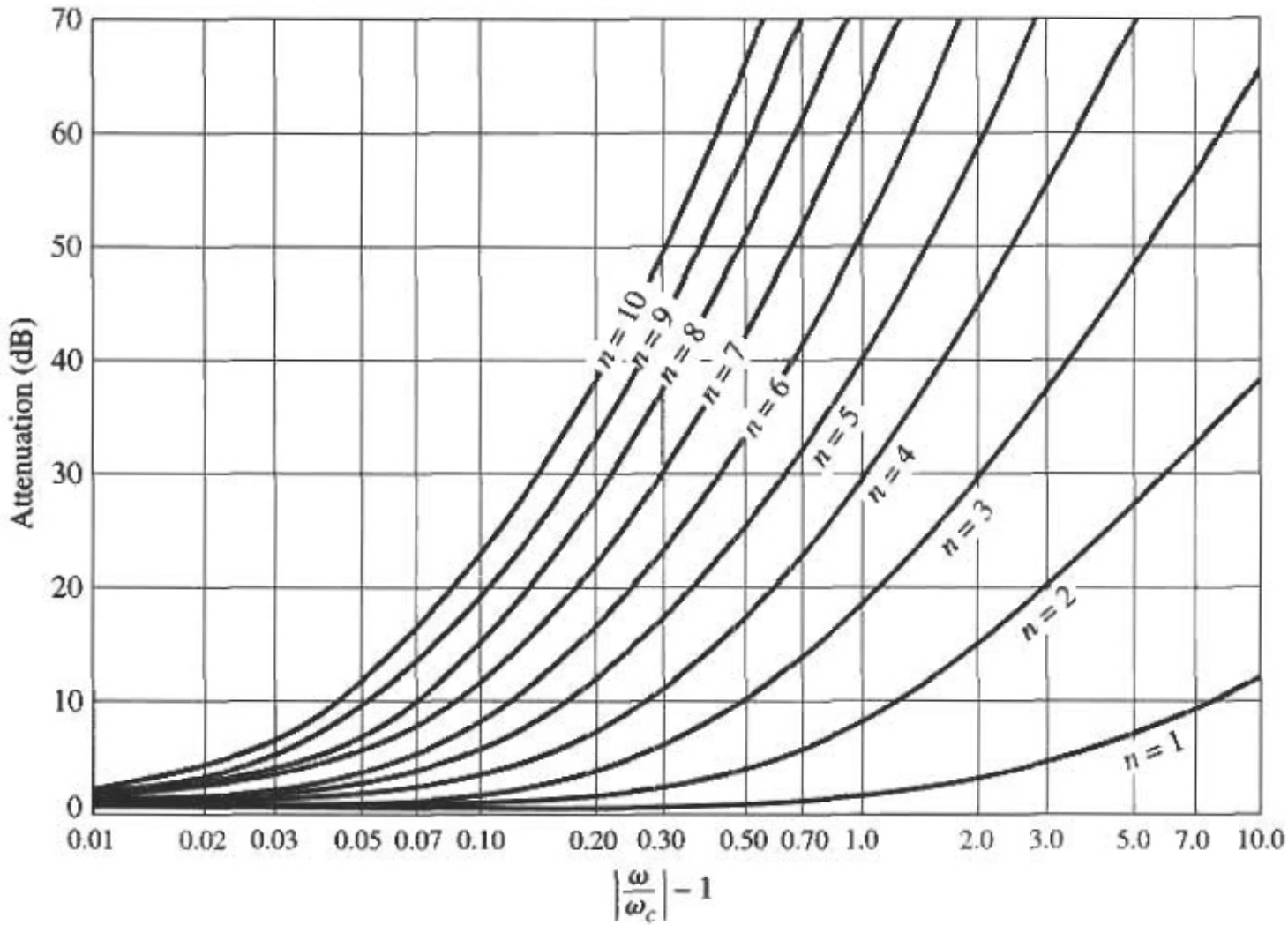

Raspuns filtru prototip echiriplu 3 dB

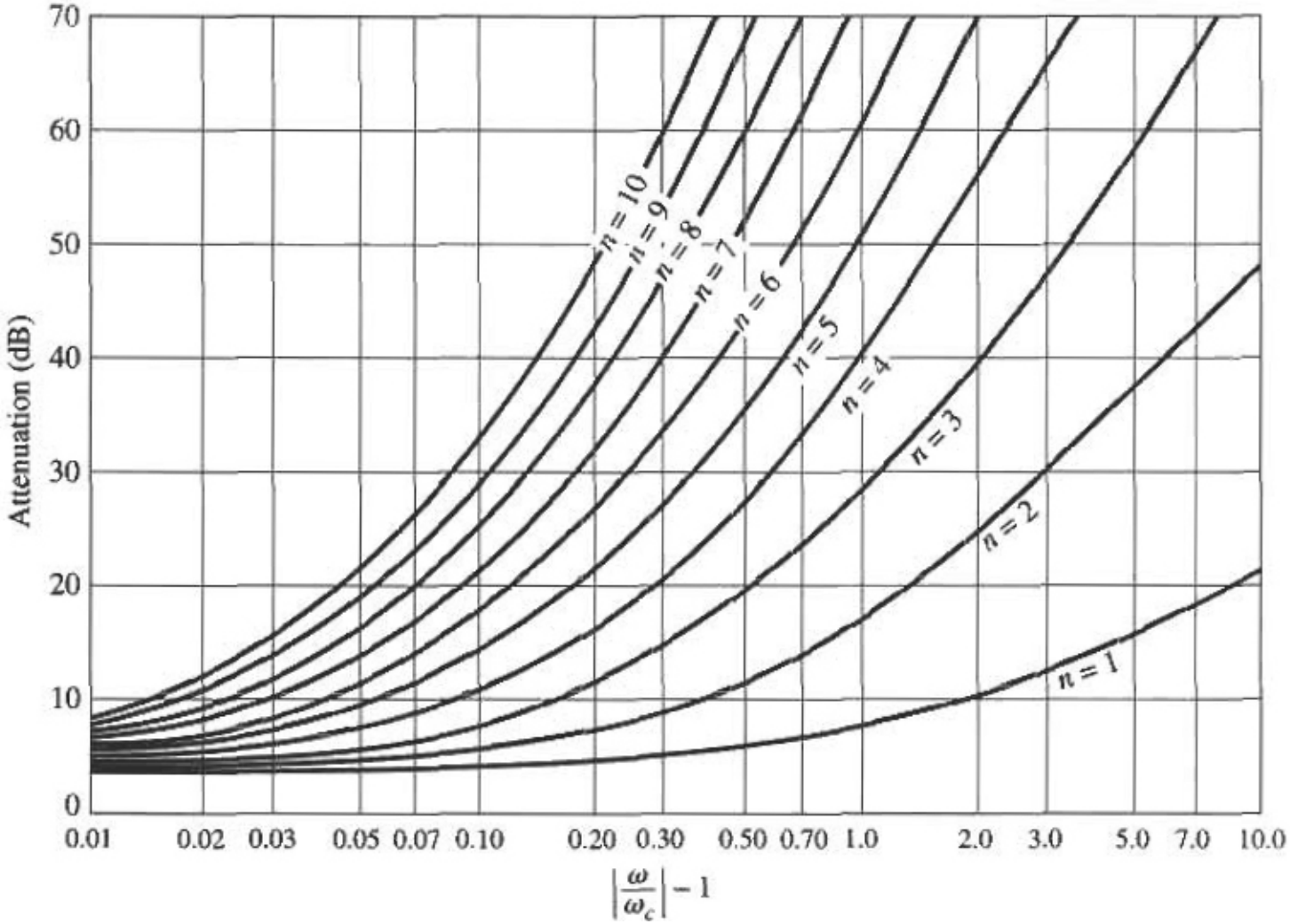

Implementarea filtrelor în domeniul microundelor

Transformarea Richard

$$\Omega = \tan(\beta l) = \tan\left(\frac{\omega l}{v_p}\right)$$

$$jX_L = j\Omega L = jL\tan(\beta l)$$

$$jB_C = j\Omega C = jC\tan(\beta l)$$

$$\Omega = 1 = \tan(\beta l)$$

pentru obtinerea aceleeasi frecvente de taiere ω_c

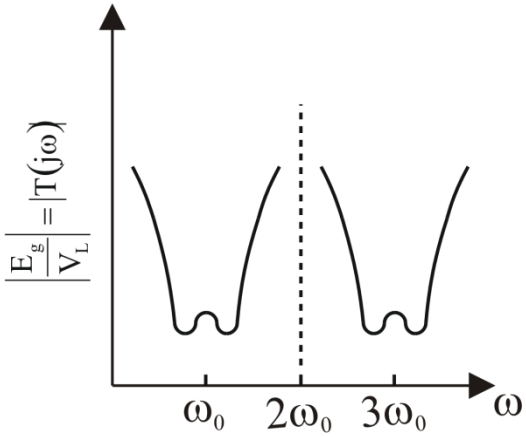

Transformarea Richard

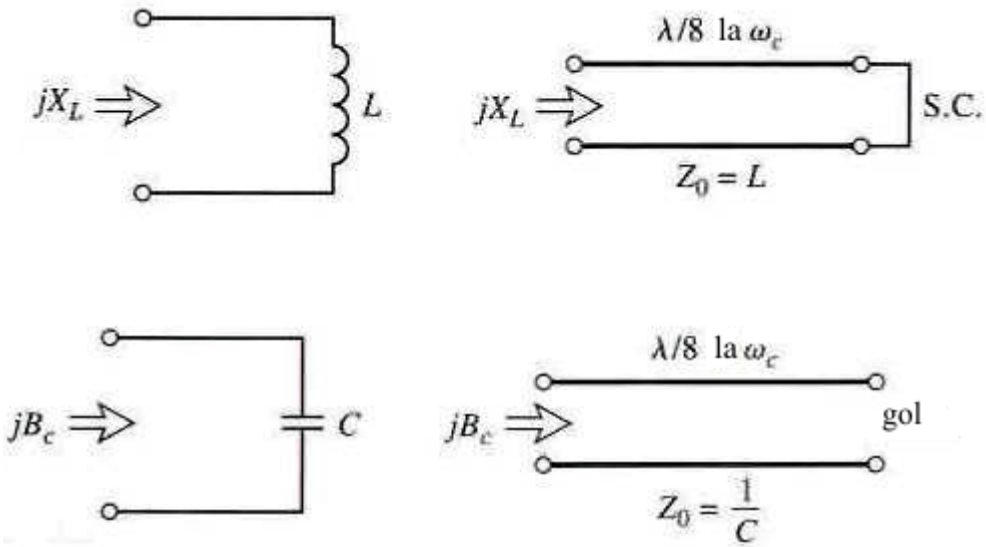

$$jX_L = j\Omega L = jL\tan(\beta l)$$

$$jB_C = j\Omega C = jC\tan(\beta l)$$

Identitățile Kuroda $n^2 = 1 + Z_2/Z_1$

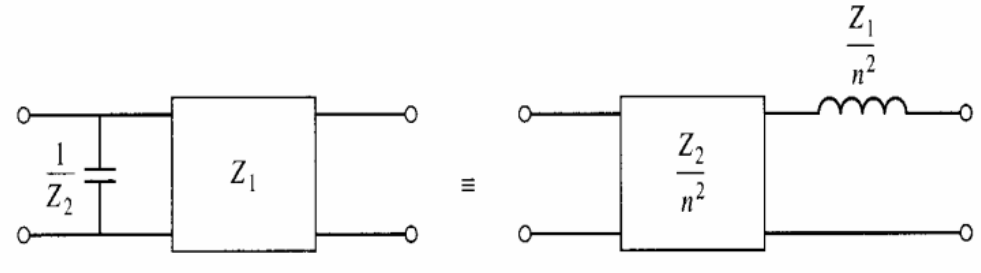

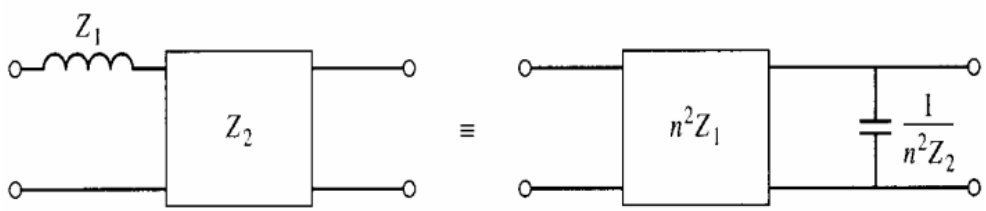

Identitățile Kuroda

$n^2 = 1 + Z_2/Z_1$

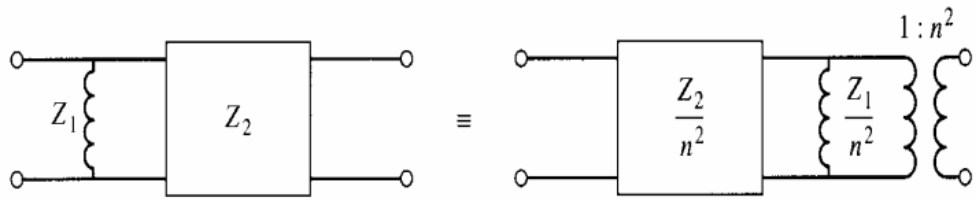

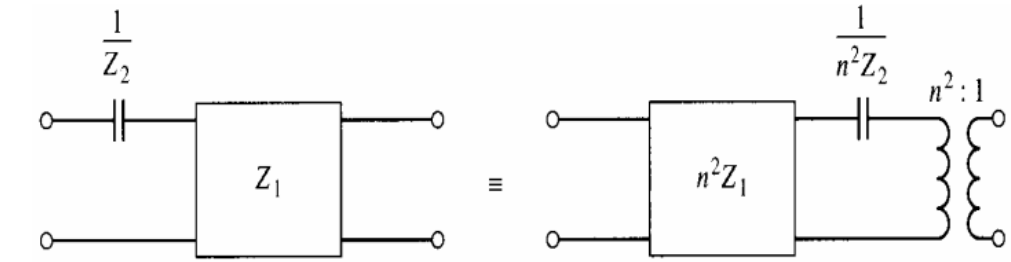

Identitățile Kuroda $n^2 = 1 + Z_2/Z_1$

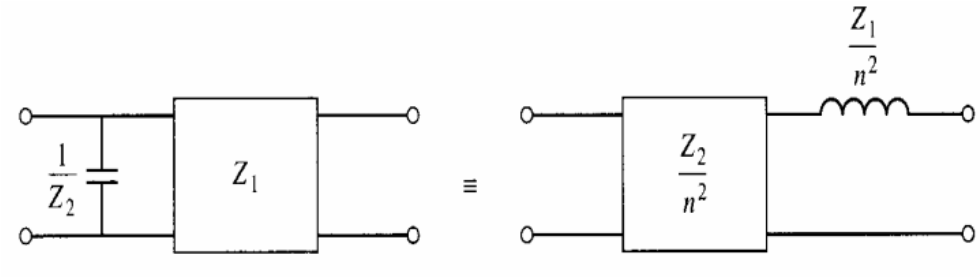

$$\begin{bmatrix} A & B \\ C & D \end{bmatrix} = \begin{bmatrix} \cos\beta\ell & jZ_1\sin\beta\ell \\ \frac{j}{Z_1}\sin\beta\ell & \cos\beta\ell \end{bmatrix} = \frac{1}{\sqrt{1+\Omega^2}} \begin{bmatrix} 1 & j\Omega Z_1 \\ \frac{j\Omega}{Z_1} & 1 \end{bmatrix}$$

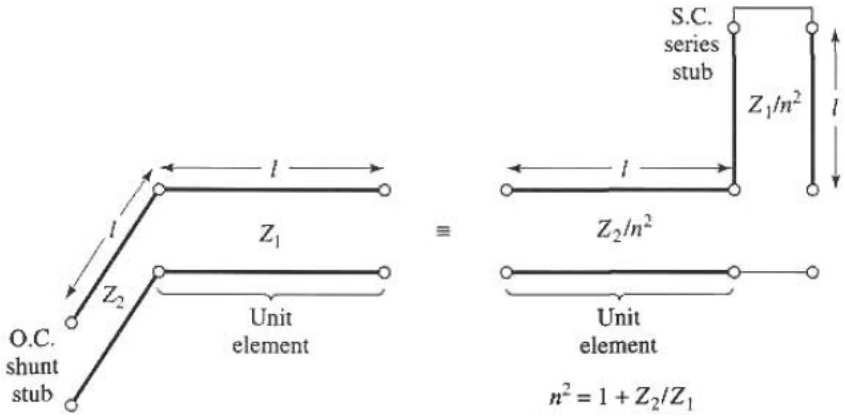

$$\begin{bmatrix} A & B \\ C & D \end{bmatrix}_L = \begin{bmatrix} 1 & 0 \\ \frac{j\Omega}{Z_2} & 1 \end{bmatrix} \begin{bmatrix} 1 & j\Omega Z_1 \\ \frac{j\Omega}{Z_1} & 1 \end{bmatrix} \frac{1}{\sqrt{1+\Omega^2}}$$

$$= \frac{1}{\sqrt{1+\Omega^2}} \begin{bmatrix} 1 & j\Omega Z_1 \\ j\Omega\left(\frac{1}{Z_1}+\frac{1}{Z_2}\right) & 1-\Omega^2\frac{Z_1}{Z_2} \end{bmatrix}$$

$$\begin{bmatrix} A & B \\ C & D \end{bmatrix}_R = \begin{bmatrix} 1 & j\frac{\Omega Z_2}{n^2} \\ \frac{j\Omega n^2}{Z_2} & 1 \end{bmatrix} \begin{bmatrix} 1 & \frac{j\Omega Z_1}{n^2} \\ 0 & 1 \end{bmatrix} \frac{1}{\sqrt{1+\Omega^2}}$$

$$= \frac{1}{\sqrt{1+\Omega^2}} \begin{bmatrix} 1 & \frac{j\Omega}{n^2}(Z_1+Z_2) \\ \frac{j\Omega n^2}{Z_2} & 1-\Omega^2\frac{Z_1}{Z_2} \end{bmatrix}.$$

Exemplu

Să se proiecteze un filtru trece-jos în tehnologie microstrip. Specificațiile sunt: frecvența de tăiere 4 GHz, ordinul 3, impedanța de 50 Ω, şi o caracteristică echi-riplu de 3 dB.

Solutie

$$g_1 = 3.3487 = L_1$$
$$g_2 = 0.7117 = C_2$$
$$g_3 = 3.3487 = L_3$$
$$g_4 = 1.0000 = R_L$$

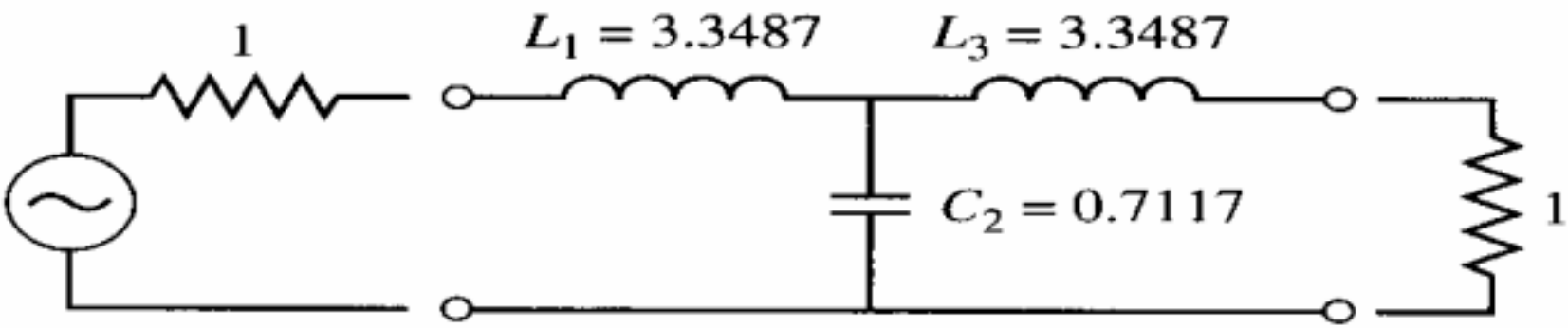

Solutie - 2

$$Z_{L1} = L_1 \qquad Z_{C2} = \frac{1}{C_2} \qquad Z_{L3} = L_3$$

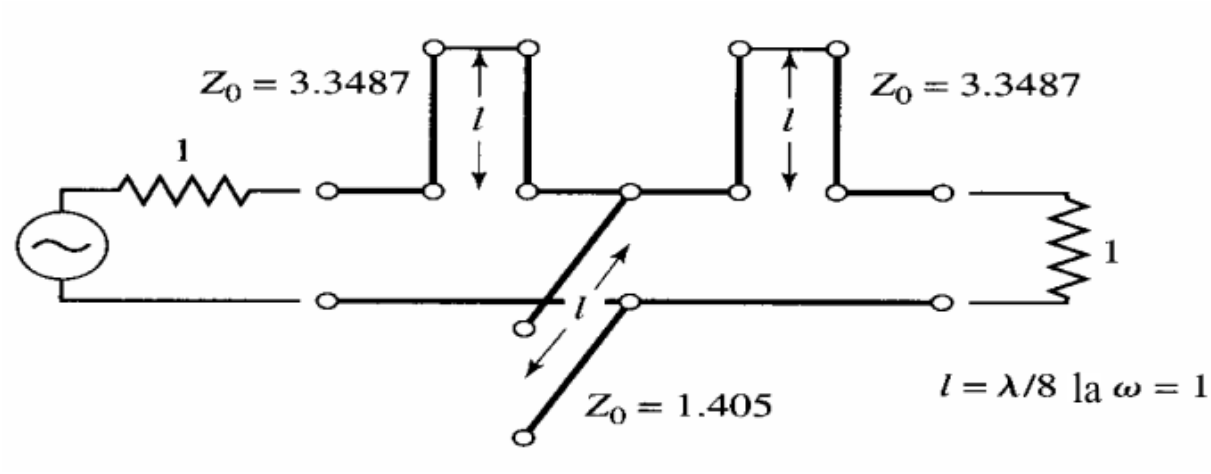

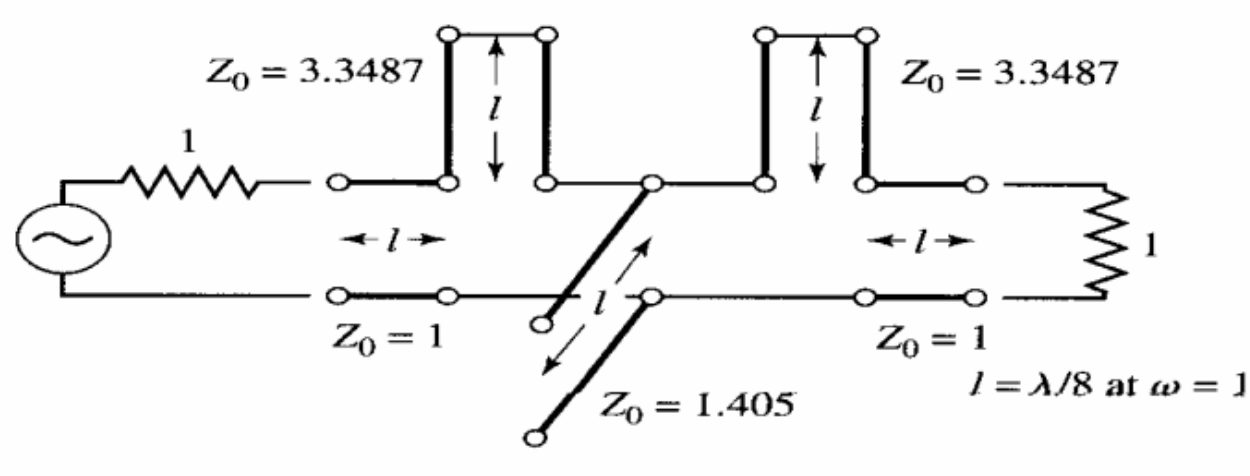

Solutie - 3

$$n = \sqrt{1 + \frac{R_L}{Z_{L1}}} \qquad n^2 = 1.299$$

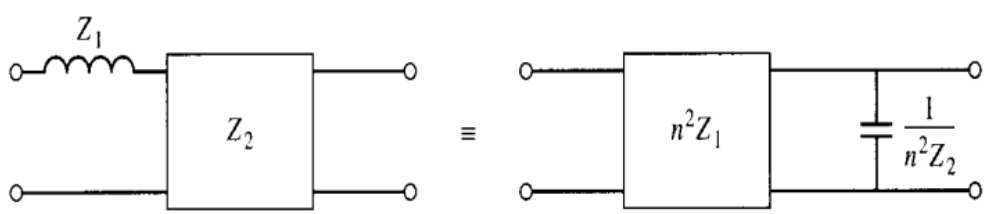

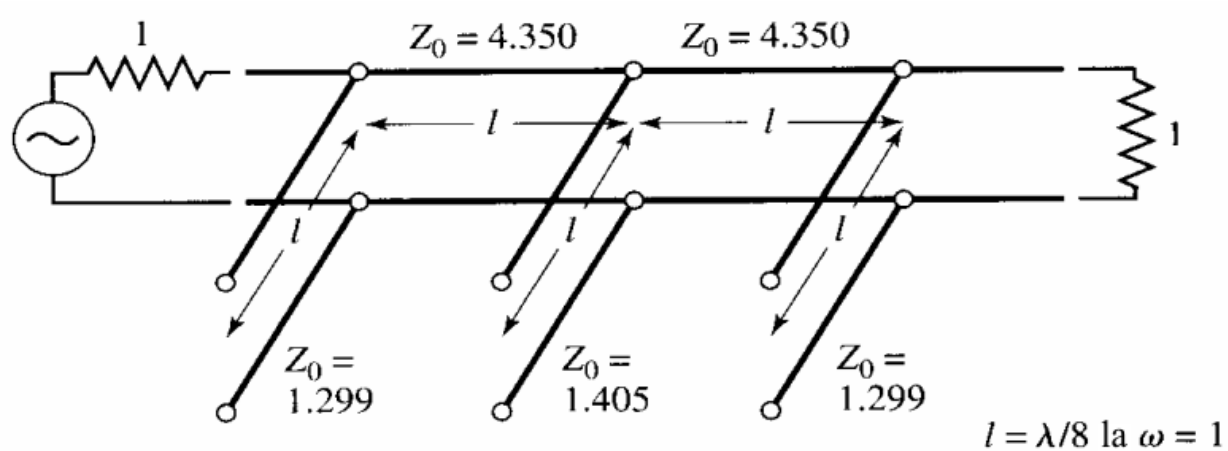

Solutie - 4

$$Z_{sh1} = n^2 Z_0 = 64.93\Omega \qquad Z_{sh2} = Z_{C2} \cdot Z_0 = 70.254\Omega \qquad Z_{sh3} = n^2 Z_0 = 64.93\Omega$$

$$Z_{se1} = n^2 \cdot Z_{L1} \cdot Z_0 = 217.435\Omega \qquad Z_{se2} = n^2 \cdot Z_{L3} \cdot Z_0 = 217.435\Omega$$

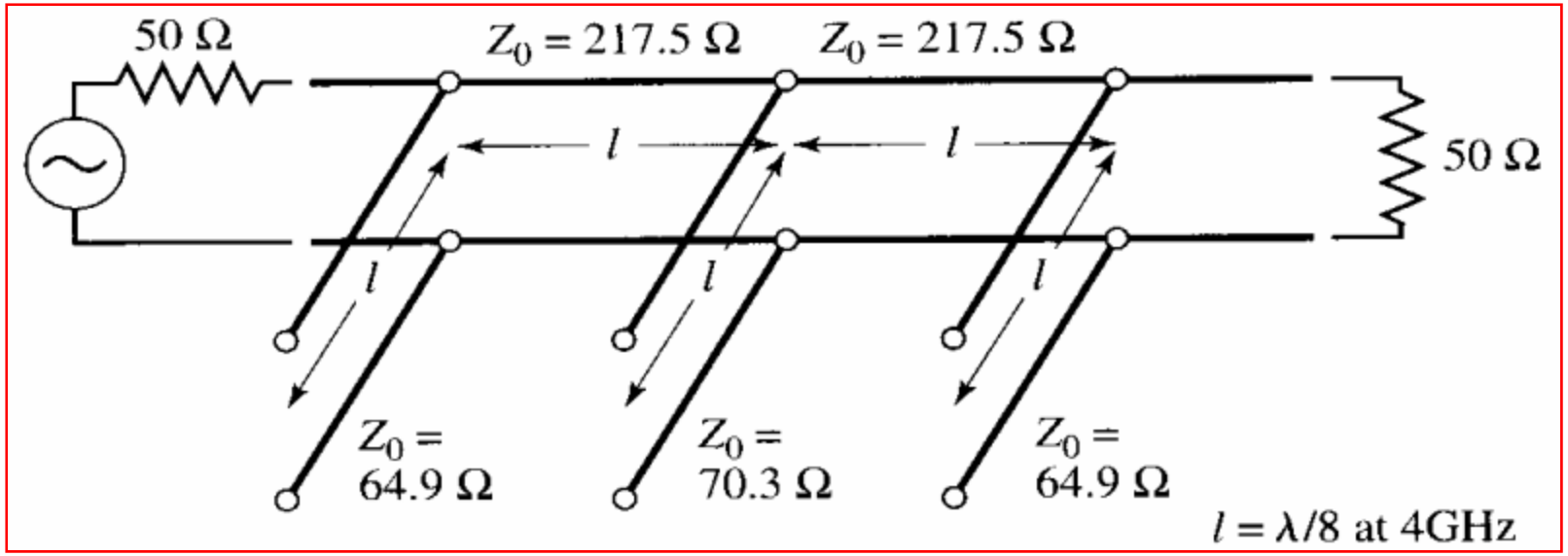

Solutie – Filtrul realizat microstrip si simulat

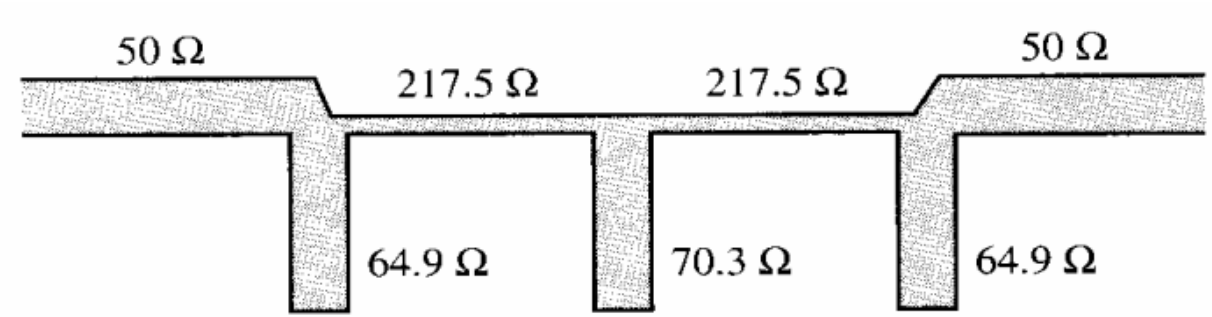

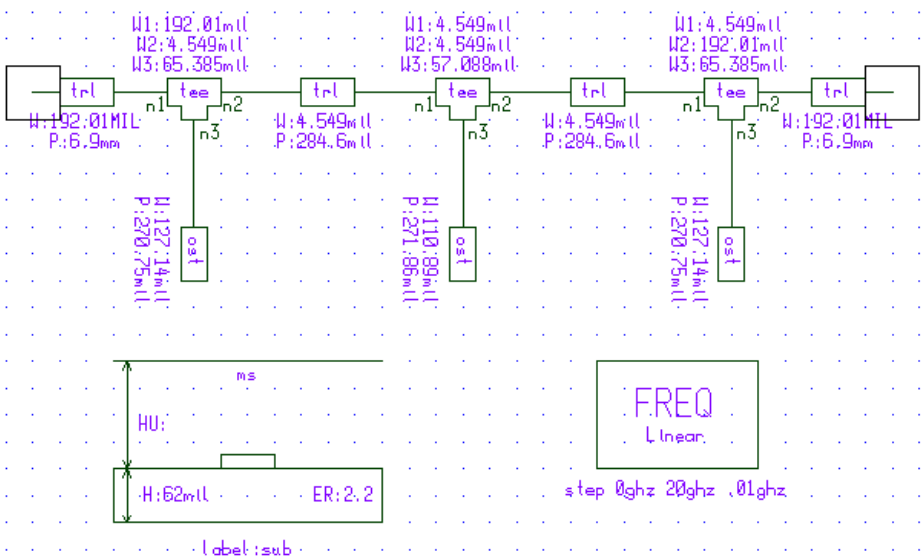

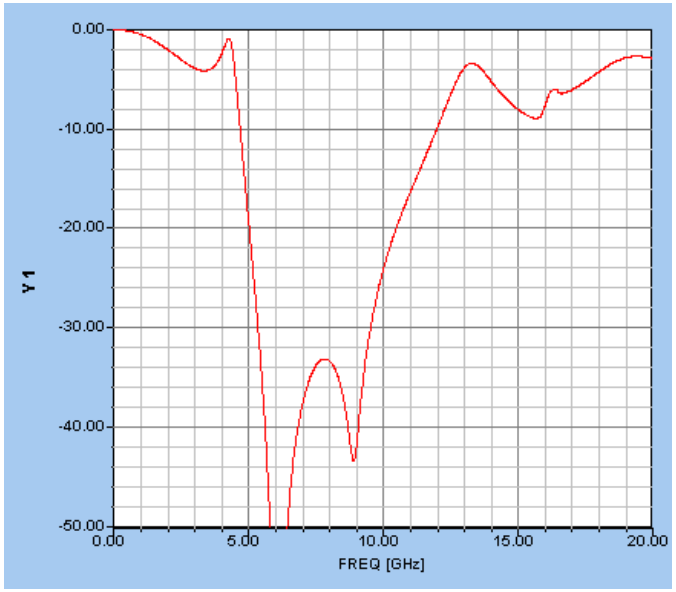

Comparatie elemente concentrate/distribuite

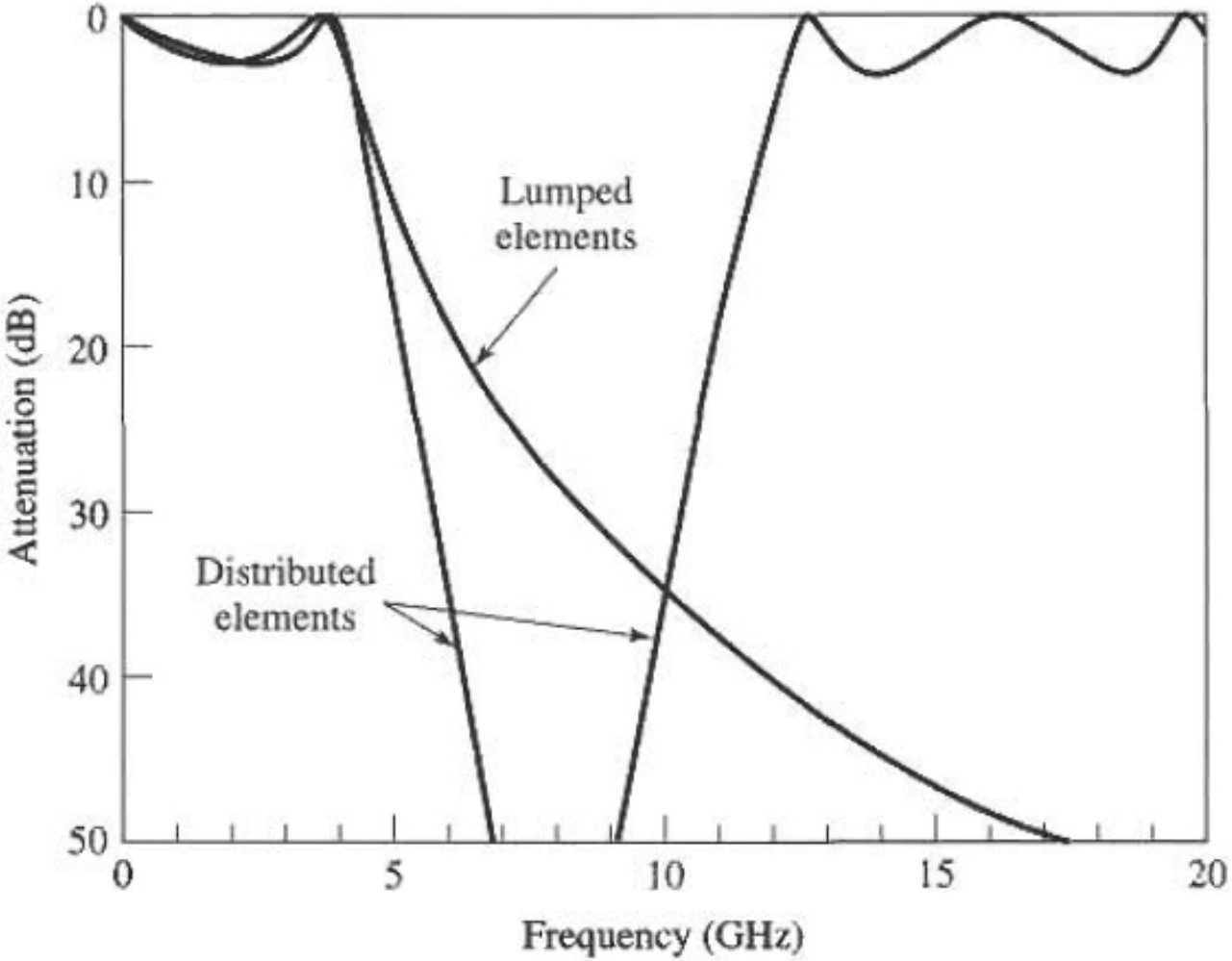

Invertoare de admitanță şi impedanță

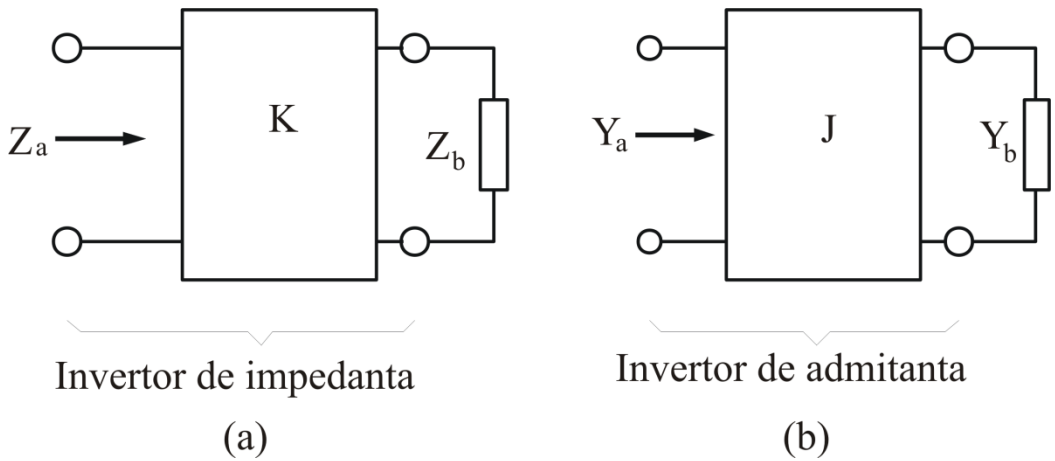

$$Z_a = \frac{K^2}{Z_b}$$

$$Y_a = \frac{J^2}{Y_b}$$

Circuitele prototip modificate folosind invertoare

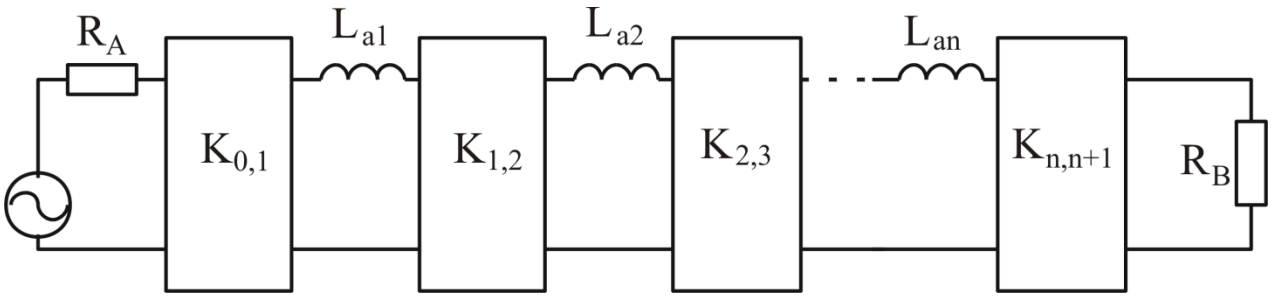

$$K_{01} = \sqrt{\frac{R_A L_{a1}}{g_0 g_1}}, K_{k,k+1}\Big|_{k=\overline{1,(n-1)}} = \sqrt{\frac{L_{ak} L_{a(k+1)}}{g_k g_{k+1}}}, K_{n,n+1} = \sqrt{\frac{L_{an} R_B}{g_n g_{n+1}}}$$

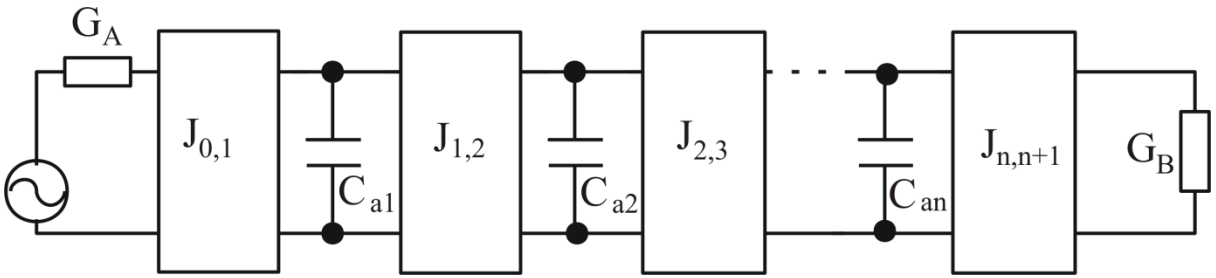

$$J_{01} = \sqrt{\frac{G_A C_{a1}}{g_0 g_1}}, J_{k,k+1}\Big|_{k=\overline{1,(n-1)}} = \sqrt{\frac{C_{ak} C_{a(k+1)}}{g_k g_{k+1}}}, J_{n,n+1} = \sqrt{\frac{C_{an} g_B}{g_n g_{n+1}}}$$

Realizări practice ale invertoarelor de impedanta- 1

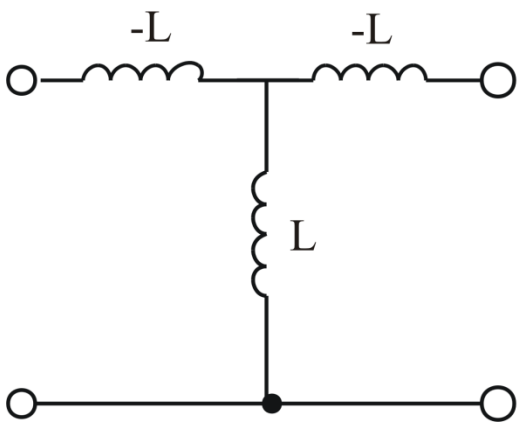

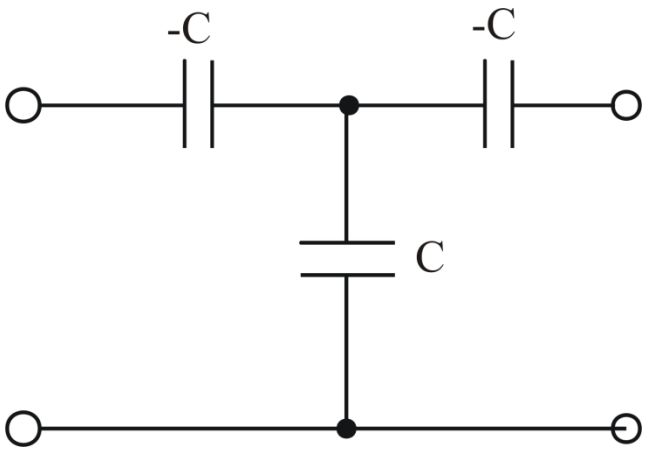

$$K = \omega L$$

$$K = 1/\omega C$$

Realizări practice ale invertoarelor de admitanta - 1

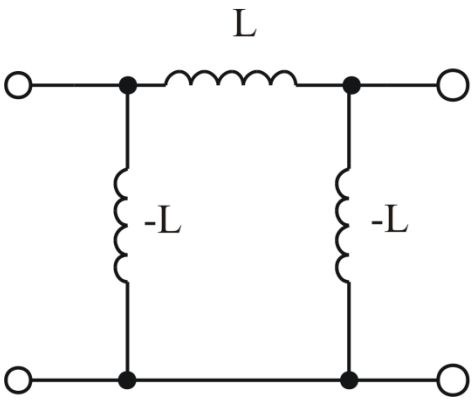

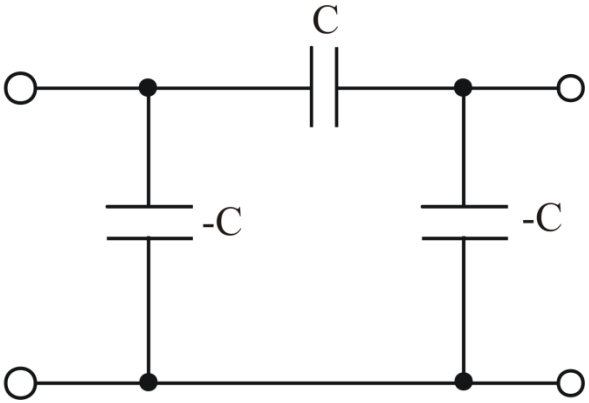

$$J = 1/\omega L$$

$$J = \omega C$$

Realizări practice ale invertoarelor de imitanta- 2

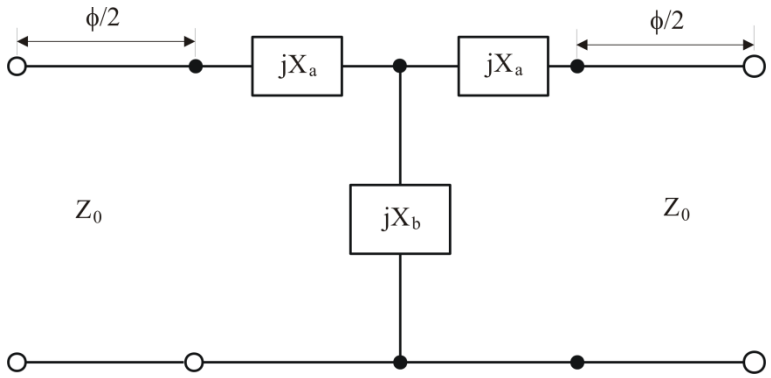

$$K = Z_0 \left| tg\left(\frac{\phi}{2} + arctg\frac{X_a}{Z_0} \right) \right| (\Omega),\ \phi = -arctg\left(\frac{2X_b}{Z_0} + \frac{X_a}{Z_0} \right) - arctg\frac{X_a}{Z_0}\ (rad)$$

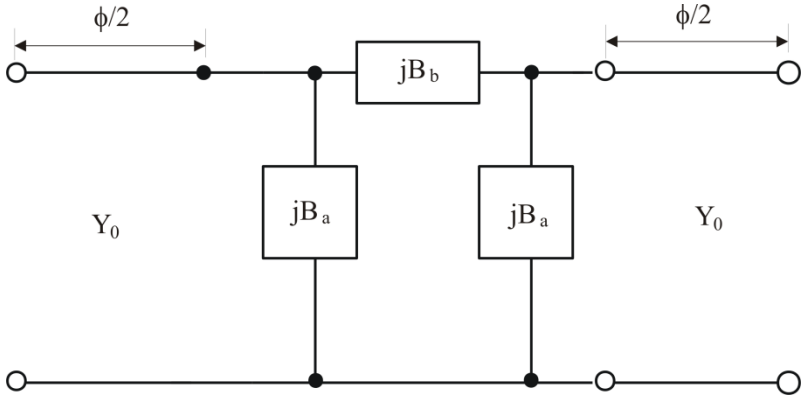

$$J = Y_0 \left| tg\left(\frac{\phi}{2} + arctg\frac{B_a}{Y_0} \right) \right| (S),\ \phi = -arctg\left(\frac{2B_b}{Y_0} + \frac{B_a}{Y_0} \right) - arctg\frac{B_a}{Y_0}\ (rad)$$

Realizări practice ale invertoarelor de imitanță - 3

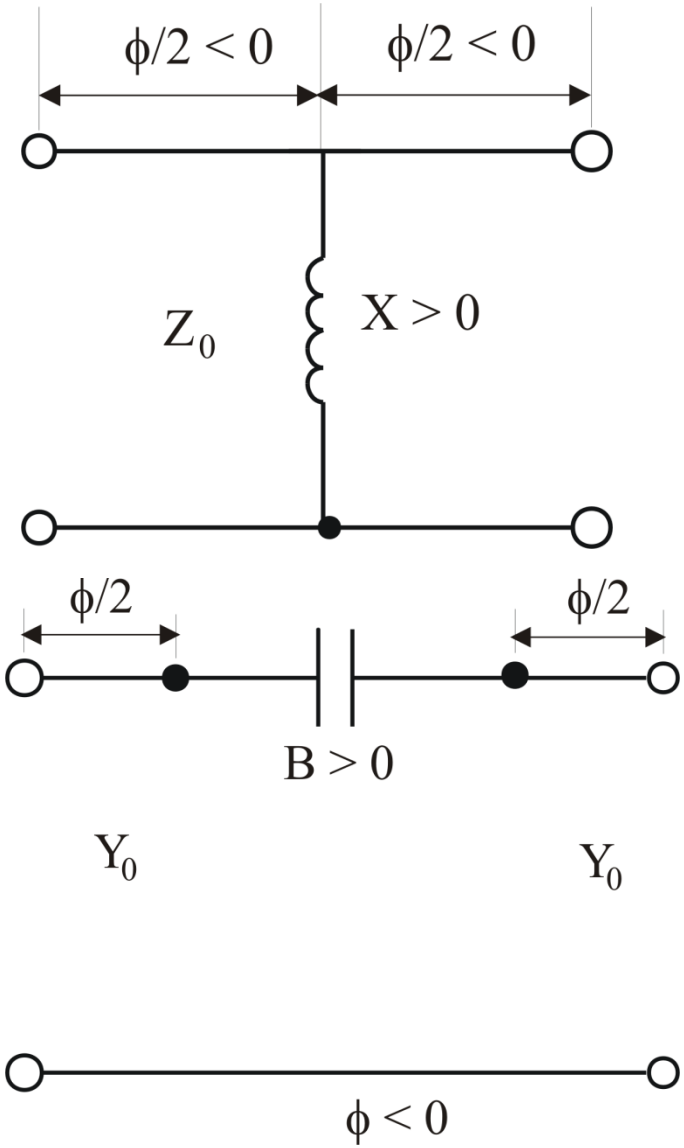

$$K = Z_0 \operatorname{tg}\left|\frac{\phi}{2}\right| (\Omega), \quad \phi = -\operatorname{arctg}\left(\frac{2X}{Z_0}\right) (\text{rad}), \quad \left|\frac{X}{Z_0}\right| = \frac{K/Z_0}{1-(K/Z_0)^2}$$

$$J = Y_0 \operatorname{tg}\left|\frac{\phi}{2}\right| (S), \quad \phi = -\operatorname{arctg}\left(\frac{2B}{Y_0}\right) (\text{rad}), \quad \left|\frac{B}{Y_0}\right| = \frac{J/Y_0}{1-(J/Y_0)^2}$$

Circuit echivalent pentru sectiuni scurte de linii

$$[Z] = \begin{bmatrix} -jZ_0 \cot(\beta l) & -jZ_0 \cos c(\beta l) \\ -jZ_0 \cos c(\beta l) & -jZ_0 \cot(\beta l) \end{bmatrix}$$

$$Z_{11} - Z_{12} = -jZ_0 \left[\frac{\cos(\beta l) - 1}{\sin(\beta l)} \right] = jZ_0 \tan\left(\frac{\beta l}{2} \right)$$

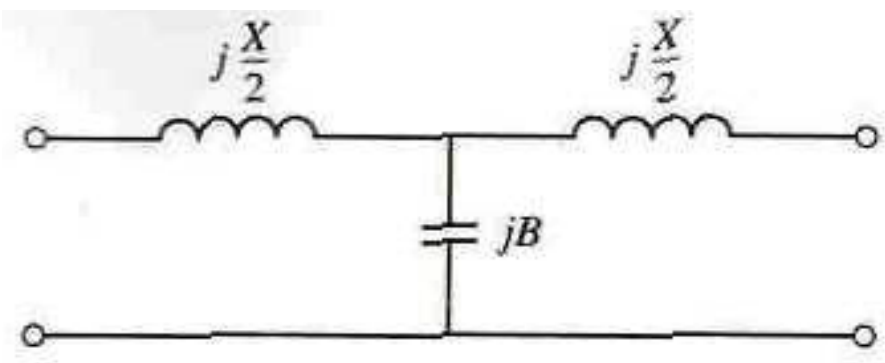

$$\beta l < \pi/2$$

$$\frac{X}{2} = Z_0 \tan\left(\frac{\beta l}{2} \right)$$

$$B = \frac{1}{Z_0} \sin(\beta l)$$

Filtre trece-jos cu variații treaptă ale impedanței caracteristice

Circuite aproximativ echivalente pentru sectiuni scurte de linie

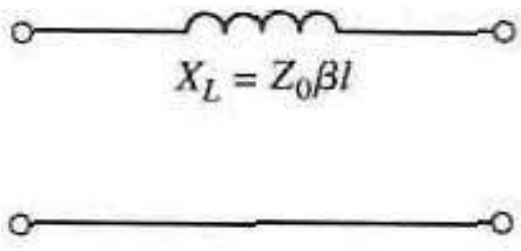

$$X \cong Z_0\beta l$$

$$\beta l < \pi/4$$

$$Z_0 = Z_h$$

$$\beta l = \frac{LR_0}{Z_h}$$ (bobină)

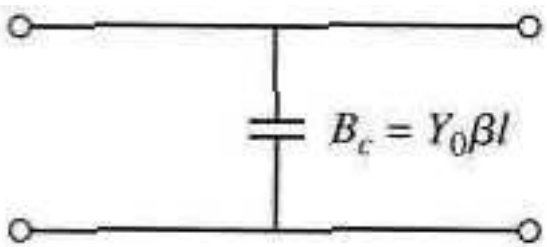

$$B \cong Y_0\beta l$$

$$\beta l < \pi/4$$

$$Z_0 = Z_l$$

$$\beta l = \frac{CZ_l}{R_0}$$ (condensator)

Exemplu

Să se proiecteze un filtru trece-jos avînd un răspuns maxim-plat, frecvența de tăiere 2.5 GHz. Este necesar să avem mai mult de 20 dB peirderi de inserție la 4 GHz. Impedanța filtrului este 50Ω, cea mai mare impedanță caracteristică realizabilă practic este 150Ω, iar cea mai mică 10Ω.

Solutia - 1

$$L_{As} = 20dB \qquad L_{Ar} = 3dB \qquad \omega'_S / \omega'_1 = 4.0/2.5 = 1.6$$

$$N = 6$$

$$g_1 = 0.517 = C_1$$

$$g_2 = 1.414 = L_2$$

$$g_3 = 1.932 = C_3$$

$$g_4 = 1.932 = L_4$$

$$g_5 = 1.414 = C_5$$

$$g_6 = 0.517 = L_6$$

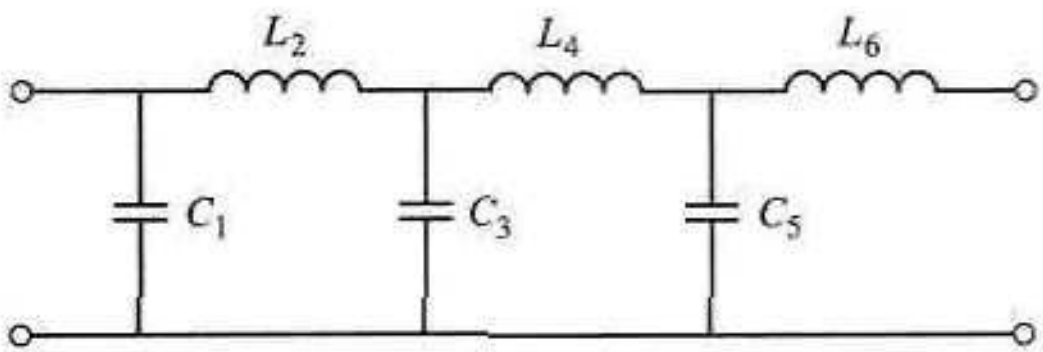

Solutia - 2

$$\beta l_1 = g_1 \frac{Z_l}{R_0} = 5.9^\circ \qquad \beta l_2 = g_2 \frac{R_0}{Z_h} = 27.0^\circ \qquad \beta l_3 = g_3 \frac{Z_l}{R_0} = 22.1^\circ$$

$$\beta l_4 = g_4 \frac{R_0}{Z_h} = 36.9^\circ \qquad \beta l_5 = g_5 \frac{Z_l}{R_0} = 16.2^\circ \qquad \beta l_6 = g_6 \frac{R_0}{Z_h} = 9.9^\circ$$

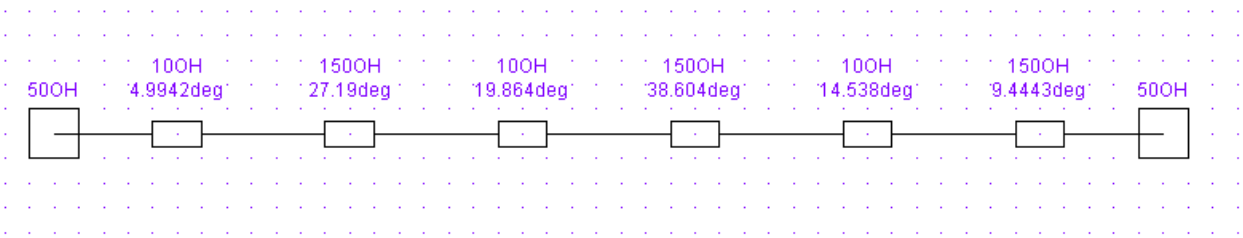

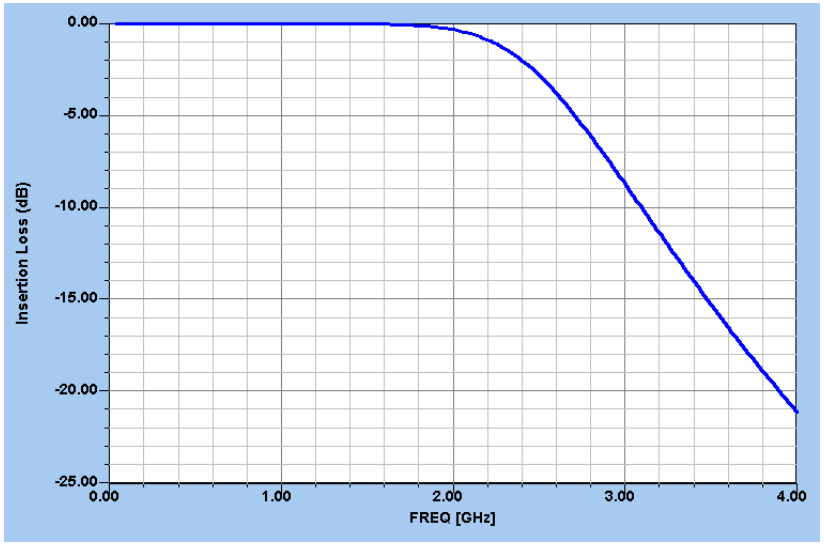

Proiectarea filtrelor cu linii cuplate

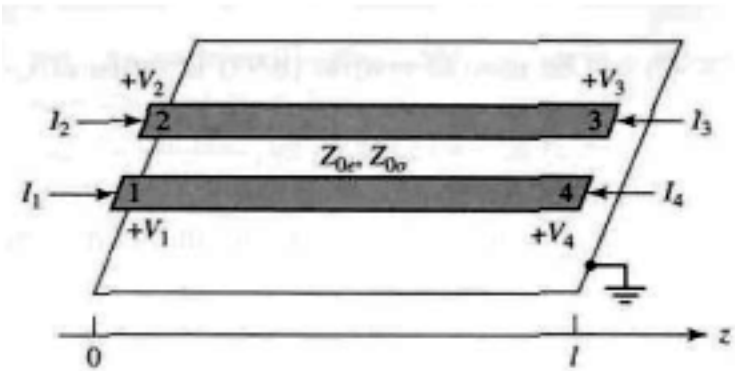

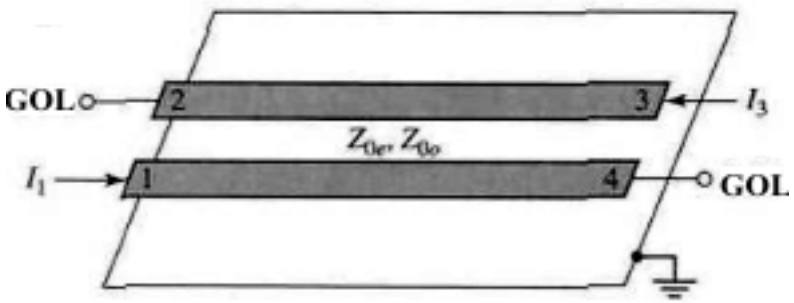

$$V_1 = Z_{11}I_1 + Z_{13}I_3$$

$$V_3 = Z_{31}I_1 + Z_{33}I_3$$

$$Z = \begin{bmatrix} \frac{-j}{2}(Z_{0e}+Z_{0o})\cot\theta & \frac{-j}{2}(Z_{0e}-Z_{0o})\cot\theta & \frac{-j}{2}(Z_{0e}-Z_{0o})\csc\theta & \frac{-j}{2}(Z_{0e}+Z_{0o})\csc\theta \\ \frac{-j}{2}(Z_{0e}-Z_{0o})\cot\theta & \frac{-j}{2}(Z_{0e}+Z_{0o})\cot\theta & \frac{-j}{2}(Z_{0e}+Z_{0o})\csc\theta & \frac{-j}{2}(Z_{0e}-Z_{0o})\csc\theta \\ \frac{-j}{2}(Z_{0e}-Z_{0o})\csc\theta & \frac{-j}{2}(Z_{0e}+Z_{0o})\csc\theta & \frac{-j}{2}(Z_{0e}+Z_{0o})\cot\theta & \frac{-j}{2}(Z_{0e}-Z_{0o})\cot\theta \\ \frac{-j}{2}(Z_{0e}+Z_{0o})\csc\theta & \frac{-j}{2}(Z_{0e}-Z_{0o})\csc\theta & \frac{-j}{2}(Z_{0e}-Z_{0o})\cot\theta & \frac{-j}{2}(Z_{0e}+Z_{0o})\cot\theta \end{bmatrix}$$

Proiectarea unui filtru trece-bandă cu linii cuplate

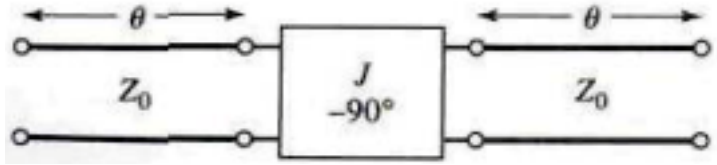

$$\begin{bmatrix} A & B \\ C & D \end{bmatrix} = \begin{bmatrix} \cos\theta & jZ_0\sin\theta \\ \dfrac{j\sin\theta}{Z_0} & \cos\theta \end{bmatrix} \cdot \begin{bmatrix} 0 & -j/J \\ -jJ & 0 \end{bmatrix} \cdot \begin{bmatrix} \cos\theta & jZ_0\sin\theta \\ \dfrac{j\sin\theta}{Z_0} & \cos\theta \end{bmatrix} =$$

$$\begin{bmatrix} \left(JZ_0 + \dfrac{1}{JZ_0}\right)\sin\theta\cos\theta & j\left(JZ_0^2\sin^2\theta - \dfrac{\cos^2\theta}{J}\right) \\ j\left(\dfrac{1}{JZ_0^2}\sin^2\theta - J\cos^2\theta\right) & \left(JZ_0 + \dfrac{1}{JZ_0}\right)\sin\theta\cos\theta \end{bmatrix}$$

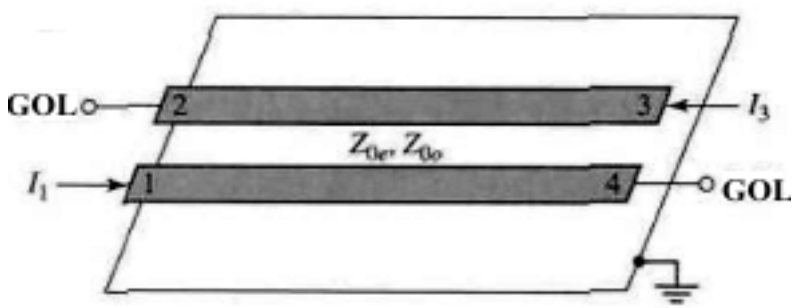

$$\begin{bmatrix} A & B \\ C & D \end{bmatrix} = \begin{bmatrix} \dfrac{Z_{11}}{Z_{21}} & \dfrac{|Z|}{Z_{21}} \\ \dfrac{1}{Z_{21}} & \dfrac{Z_{22}}{Z_{21}} \end{bmatrix}$$

$$\begin{bmatrix} A & B \\ C & D \end{bmatrix} = \begin{bmatrix} \dfrac{Z_{0e}+Z_{0o}}{Z_{0e}-Z_{0o}}\cos\theta & \dfrac{-j}{2}\left(\dfrac{(Z_{0e}+Z_{0o})^2}{Z_{0e}-Z_{0o}}\cos^2\theta + (Z_{0e}-Z_{0o})\dfrac{1}{\sin\theta}\right) \\ 2j\dfrac{1}{Z_{0e}-Z_{0o}}\sin\theta & \dfrac{Z_{0e}+Z_{0o}}{Z_{0e}-Z_{0o}}\cos\theta \end{bmatrix}$$

$$\frac{1}{2}(Z_{0e}-Z_{0o}) = JZ_0^2 \qquad Z_{0e} = Z_0\left[1 + JZ_0 + (JZ_0)^2\right]$$

$$\frac{Z_{0e}+Z_{0o}}{Z_{0e}-Z_{0o}} = JZ_0 + \frac{1}{JZ_0} \qquad Z_{0o} = Z_0\left[1 - JZ_0 + (JZ_0)^2\right]$$

Calculul sectiunilor interne

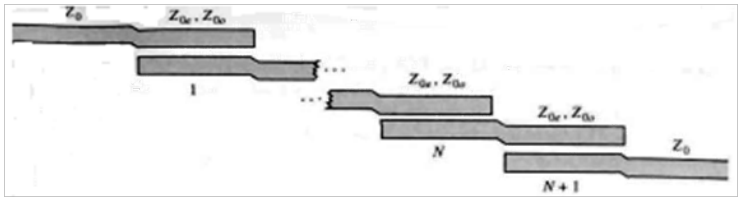

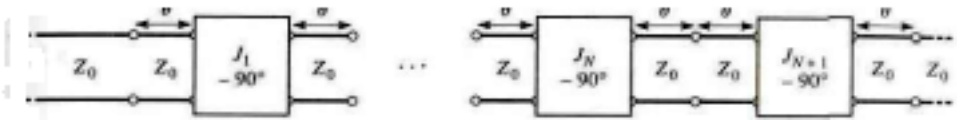

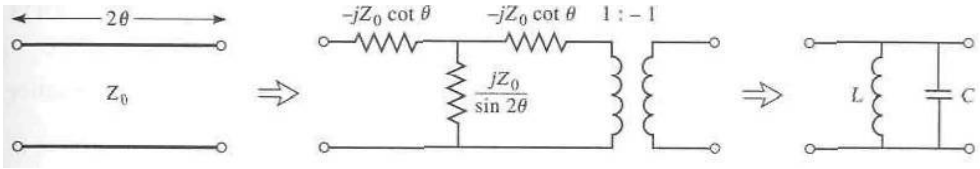

$$2\theta = \beta l = \omega l / v_p = (\omega_0 + \Delta\omega)\pi/\omega_0 = \pi(1 + \Delta\omega/\omega_0)$$

$$\theta \approx \pi/2 \quad Z_{12} = \frac{jZ_0}{\sin \pi(1 + \Delta\omega/\omega_0)} \approx \frac{-jZ_0\omega_0}{\pi(\omega - \omega_0)}$$

$$Z = \frac{-jL\omega_0^2}{2(\omega - \omega_0)}$$

$$L = \frac{2Z_0}{\pi\omega_0} \qquad C = \frac{1}{\omega_0^2 L} = \frac{\pi}{2Z_0\omega_0}$$

$$\begin{bmatrix} A & B \\ C & D \end{bmatrix} = \begin{bmatrix} \frac{Z_{11}}{Z_{12}} & \frac{Z_{11}^2 - Z_{12}^2}{Z_{12}} \\ \frac{1}{Z_{12}} & \frac{Z_{11}}{Z_{12}} \end{bmatrix} \cdot \begin{bmatrix} -1 & 0 \\ 0 & -1 \end{bmatrix} = \begin{bmatrix} \frac{-Z_{11}}{Z_{12}} & \frac{Z_{12}^2 - Z_{11}^2}{Z_{12}} \\ \frac{-1}{Z_{12}} & \frac{-Z_{11}}{Z_{12}} \end{bmatrix}$$

$$Z_{12} = \frac{-1}{C} = \frac{jZ_0}{\sin 2\theta}$$

$$Z_{11} = Z_{22} = -Z_{12}A = -jZ_0 \cot 2\theta$$

$$Z_{11} - Z_{12} = -jZ_0 \frac{1 + \cos 2\theta}{\sin 2\theta} = -jZ_0 \cot \theta$$

Calculul sectiunilor de capat

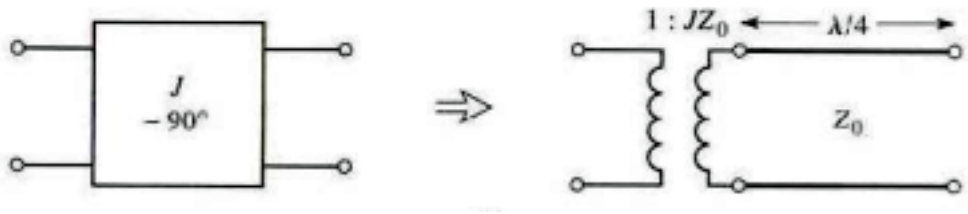

$$\begin{bmatrix} A & B \\ C & D \end{bmatrix} = \begin{bmatrix} 0 & -j/J \\ -jJ & 0 \end{bmatrix}$$

$$\begin{bmatrix} A & B \\ C & D \end{bmatrix} = \begin{bmatrix} \frac{1}{N} & 0 \\ 0 & N \end{bmatrix} \cdot \begin{bmatrix} 0 & -jZ_0 \\ \frac{-j}{Z_0} & 0 \end{bmatrix} = \begin{bmatrix} 0 & \frac{-jZ_0}{N} \\ \frac{-jN}{Z_0} & 0 \end{bmatrix}$$

$$N = JZ_0$$

Circuitul echivalent al filtrului

$$Y = \frac{1}{J_1^2 Z_0^2}\left\{ j\omega C_1 + \frac{1}{j\omega L_1} + \frac{J_2^2}{j\sqrt{C_2/L_2}\left[(\omega/\omega_0)-(\omega_0/\omega)\right]+Z_0 J_3^2} \right\} =$$

$$= \frac{1}{J_1^2 Z_0^2}\left\{ j\sqrt{\frac{C_1}{L_1}}\left(\frac{\omega}{\omega_0}-\frac{\omega_0}{\omega}\right) + \frac{J_2^2}{j\sqrt{C_2/L_2}\left[(\omega/\omega_0)-(\omega_0/\omega)\right]+Z_0 J_3^2} \right\}$$

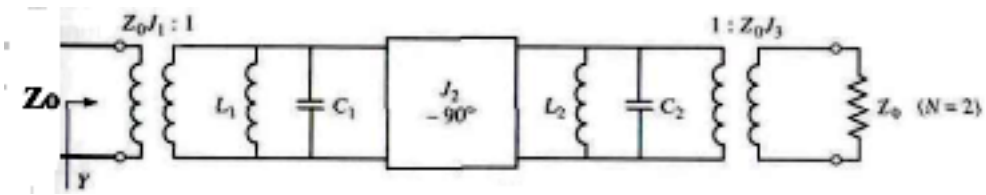

$$j\omega C_2 + \frac{1}{j\omega L_2} + Z_0 J_3^2 = j\sqrt{\frac{C_2}{L_2}}\left(\frac{\omega}{\omega_0}-\frac{\omega_0}{\omega}\right) + Z_0 J_3^2$$

$$Y = j\omega C_1' + \frac{1}{j\omega L_1'} + \frac{1}{j\omega L_2' + (1/j\omega C_2') + Z_0} =$$

$$= j\sqrt{\frac{C_1'}{L_1'}}\left(\frac{\omega}{\omega_0}-\frac{\omega_0}{\omega}\right) + \frac{1}{j\sqrt{L_2'/C_2'}\left[(\omega/\omega_0)-(\omega_0/\omega)\right]+Z_0}$$

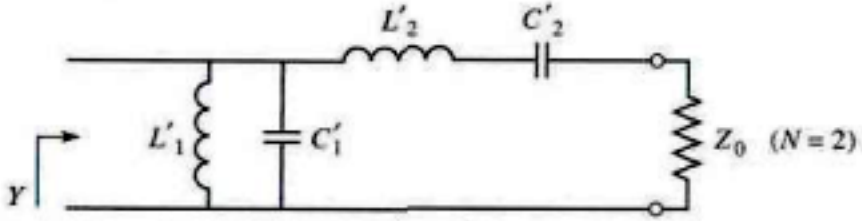

$$\frac{1}{J_1^2 Z_0^2}\sqrt{\frac{C_1}{L_1}} = \sqrt{\frac{C_1'}{L_1'}} \qquad \frac{J_1^2 Z_0^2}{J_2^2}\sqrt{\frac{C_2}{L_2}} = \sqrt{\frac{L_2'}{C_2'}} \qquad \frac{J_1^2 Z_0^3 J_3^2}{J_2^2} = Z_0$$

Relatiile de calcul ale filtrului

$$L_1' = \frac{\Delta Z_0}{\omega_0 g_1}$$

$$C_1' = \frac{g_1}{\Delta \omega_0 Z_0}$$

$$L_2' = \frac{g_2 Z_0}{\Delta \omega_0}$$

$$C_2' = \frac{\Delta}{\omega_0 g_2 Z_0}$$

$$L_n = \frac{2Z_0}{\pi \omega_0}$$

$$C_n = \frac{1}{\omega_0^2 L_n} = \frac{\pi}{2 Z_0 \omega_0}$$

$$J_1 Z_0 = \left(\frac{C_1 L_1'}{L_1 C_1'}\right)^{1/4} = \sqrt{\frac{\pi\Delta}{2g_1}}$$

$$J_2 Z_0 = J_1 Z_0^2 \left(\frac{C_2 C_2'}{L_2 L_2'}\right)^{1/4} = \frac{\pi\Delta}{2\sqrt{g_1 g_2}}$$

$$J_3 Z_0 = \frac{J_2}{J_1} = \sqrt{\frac{\pi\Delta}{2g_2}}$$

$$\Delta = (\omega_2 - \omega_1)/\omega_0$$

$$Z_0 J_1 = \sqrt{\frac{\pi\Delta}{2g_1}}$$

$$Z_0 J_n = \frac{\pi\Delta}{2\sqrt{g_{n-1} g_n}} \qquad n = 2,3,\ldots,N$$

$$Z_0 J_{N+1} = \sqrt{\frac{\pi\Delta}{2g_N g_{N+1}}}$$

$$(Z_{0e})_k = Z_0\left[1 + J_k Z_0 + (J_k Z_0)^2\right]$$

$$(Z_{0o})_k = Z_0\left[1 - J_k Z_0 + (J_k Z_0)^2\right]$$

Exemplu

Proiectați un filtru trece-bandă cu N=3 şi ripluri de 0.5 dB în bandă. Frecvența centrală este de 2 GHz, banda de 10% şi

$$Z_0 = 50\Omega$$

. Care este atenuarea la 1.8 GHz ?

Solutie

$$\omega \leftarrow \frac{1}{\Delta}\left(\frac{\omega}{\omega_0} - \frac{\omega_0}{\omega}\right) = \frac{1}{0.1}\left(\frac{1.8}{2.0} - \frac{2.0}{1.8}\right) = -2.11$$

$$L_A\,(\mathrm{dB}) = 10\log\left[1 + \varepsilon_r\left(\mathrm{ch}^2 n\left(\mathrm{arcch}\left(\frac{\omega'_s}{\omega'_1}\right)\right)\right)\right] =$$

$$10\log\left[1 + 0.122\left(\mathrm{ch}^2 3\left(\mathrm{arcch}(2.11)\right)\right)\right] = 20.8\ \mathrm{dB}$$

n	g_n	$Z_0 J_n$	$Z_{0e}(\Omega)$	$Z_{0o}(\Omega)$
1	1.5963	0.3137	70.61	39.24
2	1.0967	0.1187	56.64	44.77
3	1.5963	0.1187	56.64	44.77
4	1.0000	0.3137	70.61	39.24

Rezultatul simularii

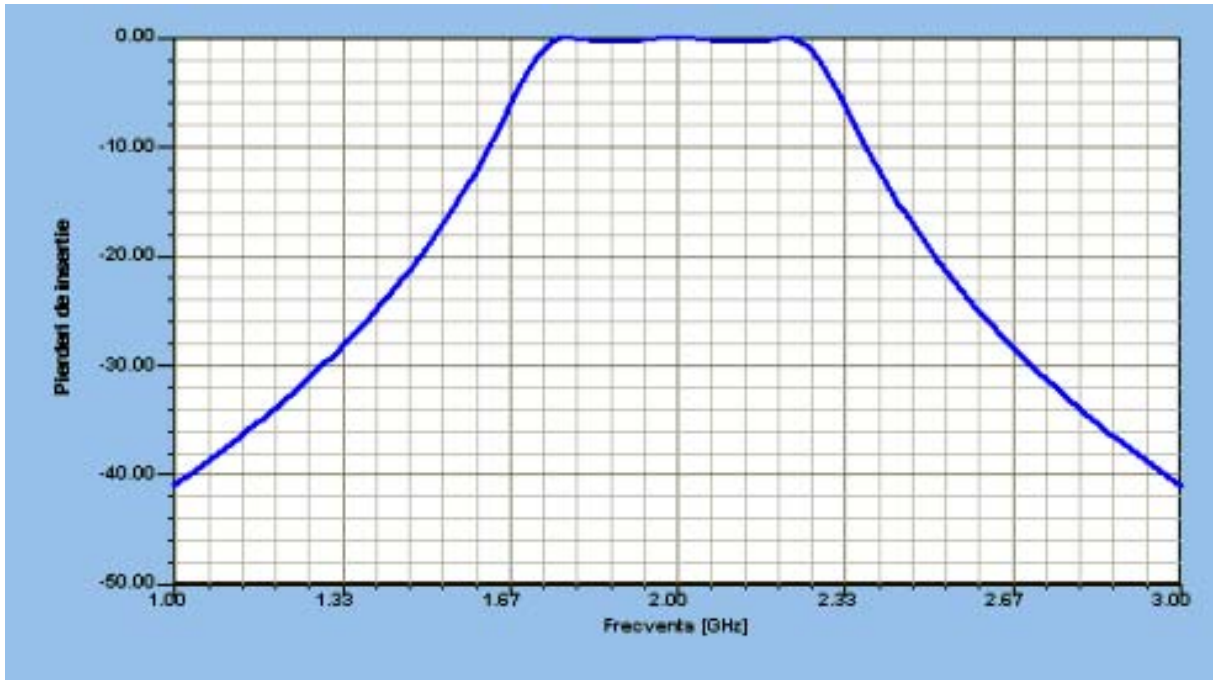

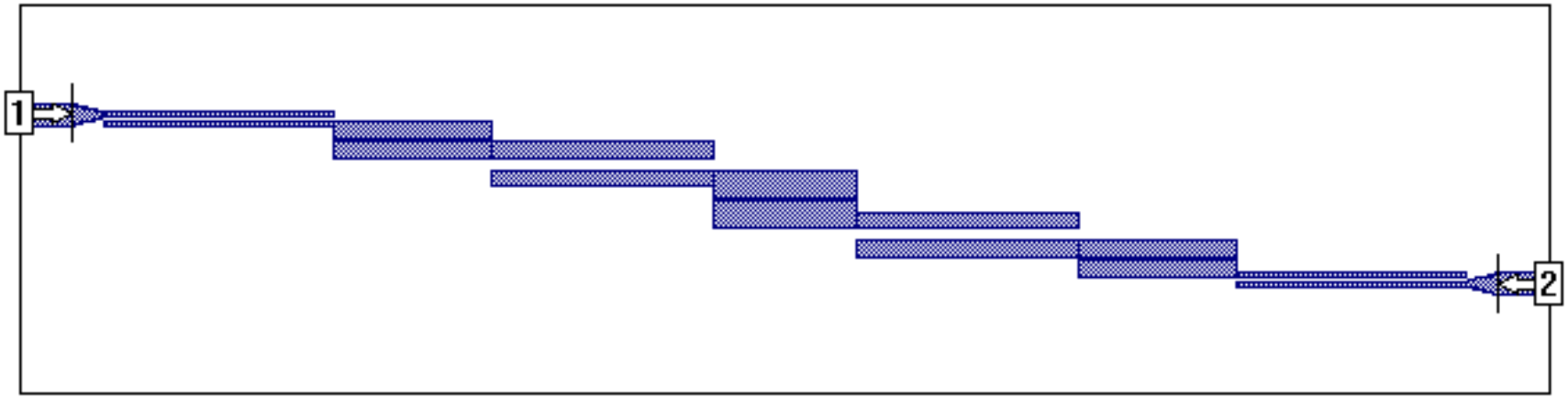

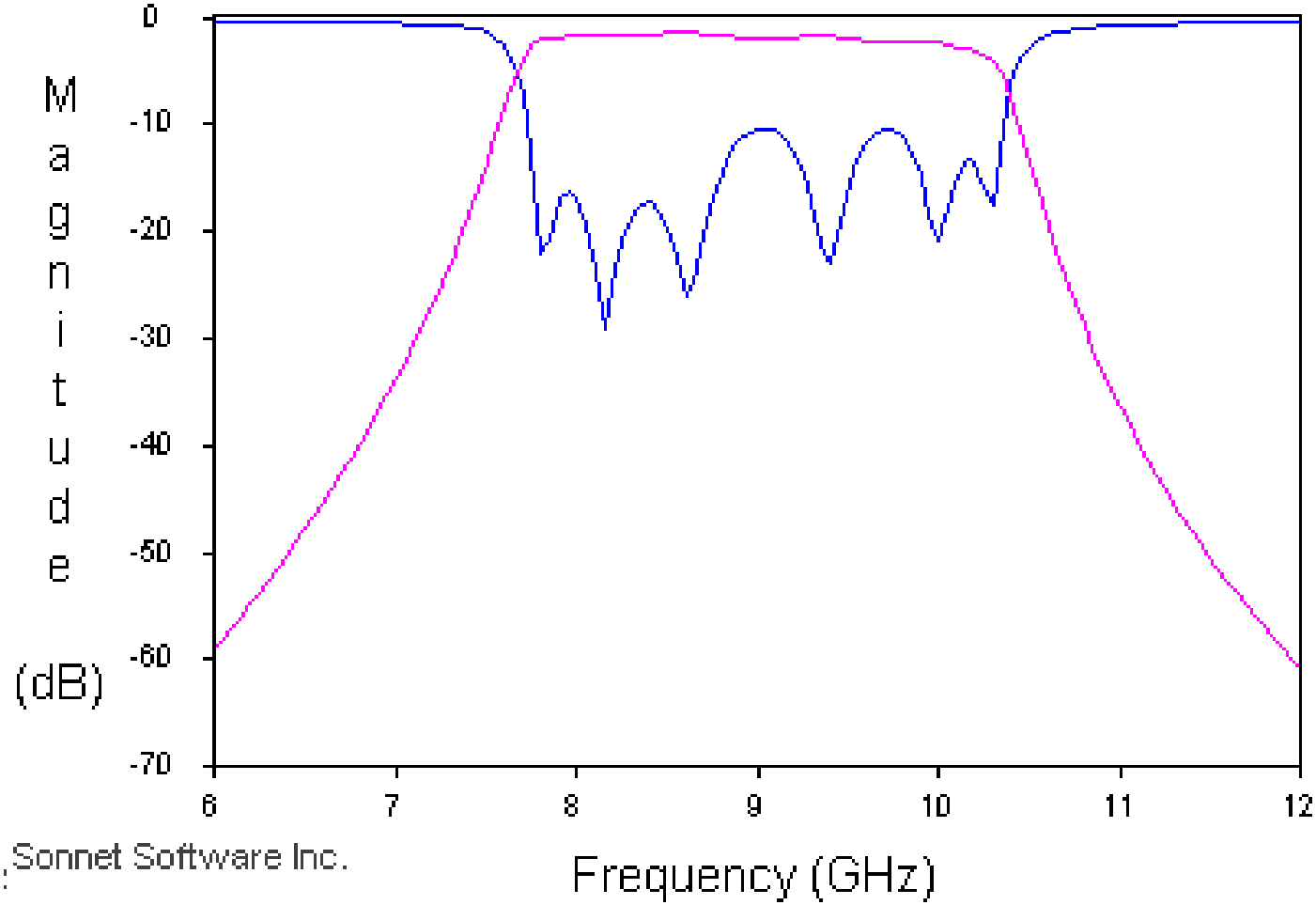

Sonnet Software Inc.

Filtru trece banda interdigital

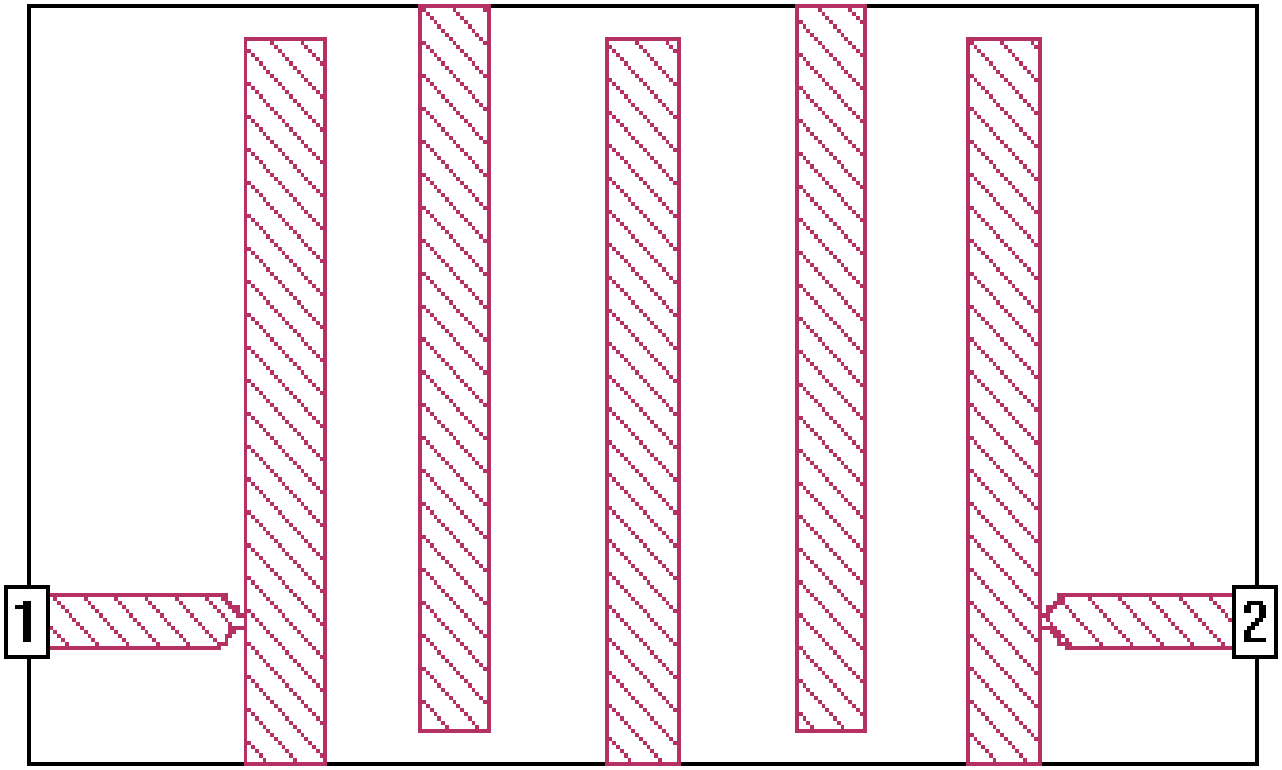

Filtru trece banda interdigital

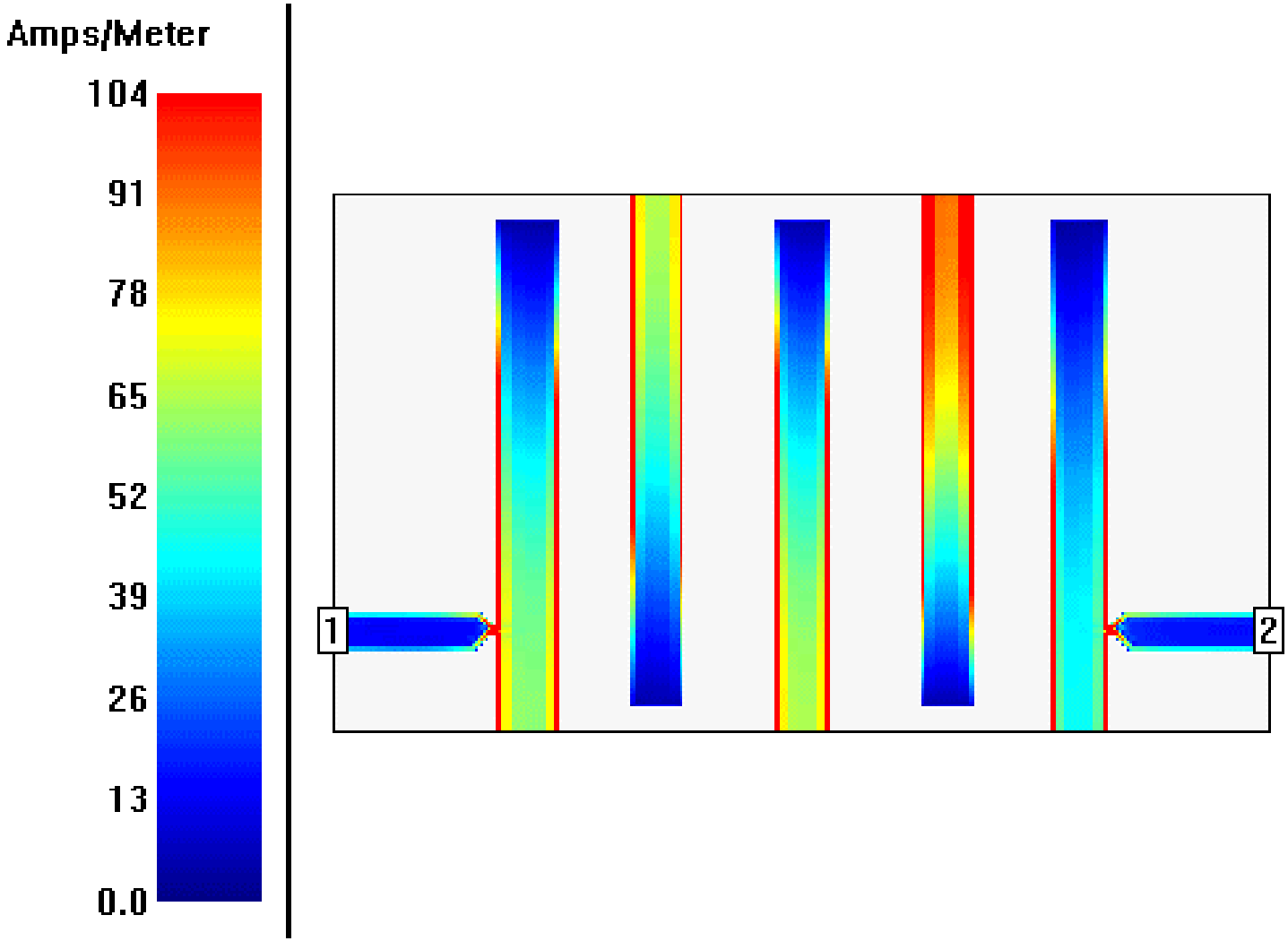

Filtru trece banda interdigital

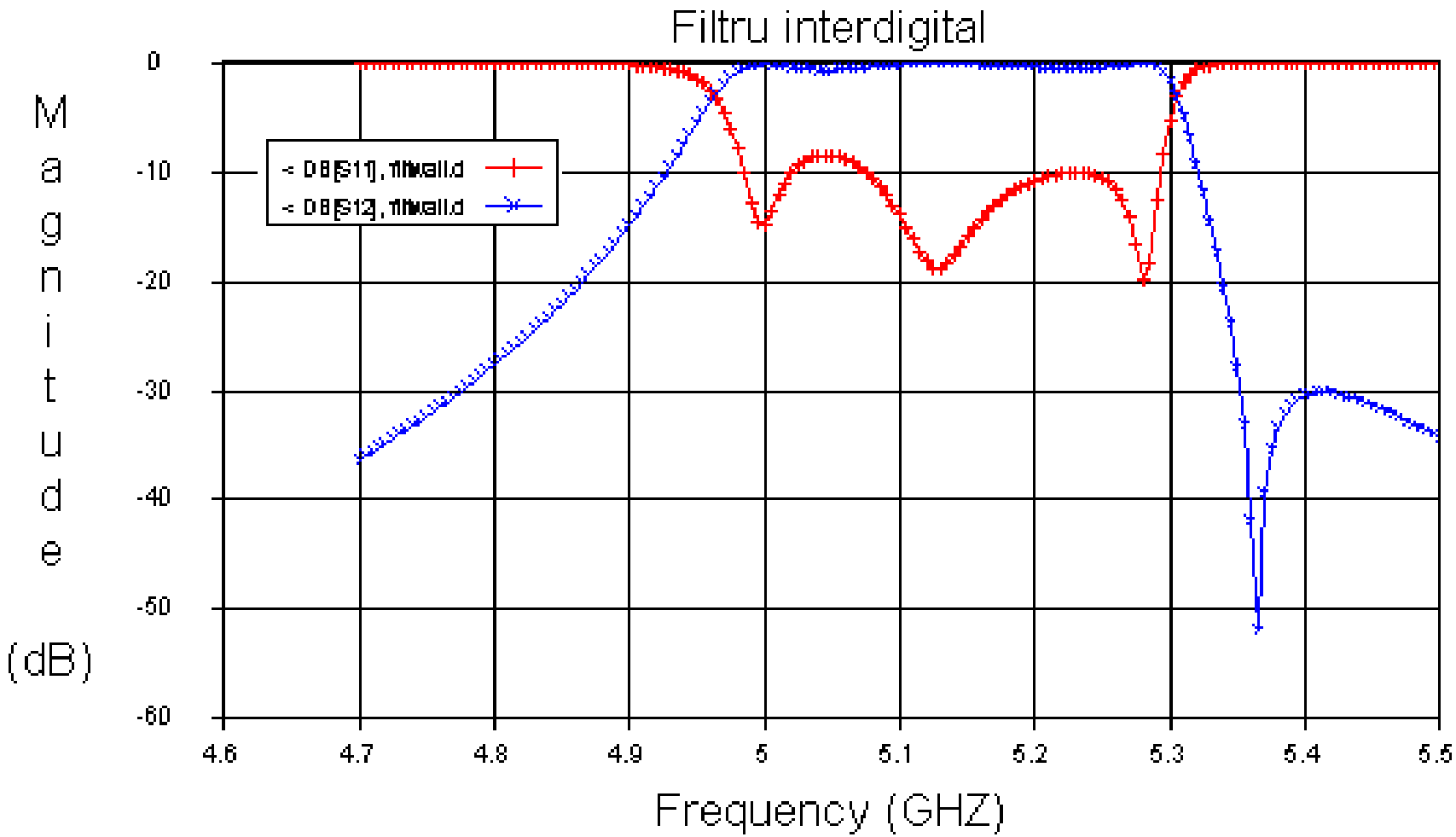

Filtru hairpin