CUPLOARE

Proprietati de baza ale cuploarelor directionale

Circuite cu patru porti

$(S_{ij} = S_{ji})$ Reciproc

$S_{ii} = 0$ Adaptare simultana la toate portile

$$[S] = \begin{bmatrix} 0 & S_{12} & S_{13} & S_{14} \\ S_{12} & 0 & S_{23} & S_{24} \\ S_{13} & S_{23} & 0 & S_{34} \\ S_{14} & S_{24} & S_{34} & 0 \end{bmatrix}$$

(11) $S_{14}^{*}\left(|S_{13}|^2 - |S_{24}|^2\right) = 0$

(13) $S_{23}\left(|S_{12}|^2 - |S_{34}|^2\right) = 0$

(14a) $|S_{12}|^2 + |S_{13}|^2 = 1$

(14b) $|S_{12}|^2 + |S_{24}|^2 = 1$

(14c) $|S_{13}|^2 + |S_{34}|^2 = 1$

(14d) $|S_{24}|^2 + |S_{34}|^2 = 1$

(15) $S_{12}^{*}S_{13} + S_{24}^{*}S_{34} = 0$

$\sum_k S_{ik}S_{kj}^{*} = \delta_{ij}$ Fara pierderi

10 ecuatii

Cazul 1

(11) si (13) > $S_{14} = S_{23} = 0 \Rightarrow$ $[S] = \begin{bmatrix} 0 & S_{12} & S_{13} & 0 \\ S_{12} & 0 & 0 & S_{24} \\ S_{13} & 0 & 0 & S_{34} \\ 0 & S_{24} & S_{34} & 0 \end{bmatrix}$ $\Leftrightarrow$ **Cuplor directional**

(14a) si (14b) > $|S_{13}| = |S_{24}|$

(14b) si (14d) > $|S_{12}| = |S_{34}|$

Alegem: $S_{12} = S_{34} = \alpha$ $\quad S_{13} = \beta e^{j\theta}$ $\quad S_{24} = \beta e^{j\phi}$

(15) > $\theta + \phi = \pi \pm 2n\pi$

Cuplor simetric $\theta = \phi = \pi/2$

$$[S] = \begin{bmatrix} 0 & \alpha & j\beta & 0 \\ \alpha & 0 & 0 & j\beta \\ j\beta & 0 & 0 & \alpha \\ 0 & j\beta & \alpha & 0 \end{bmatrix}$$

Cuplor antisimetric $\theta = 0\,,\ \phi = \pi$

$$[S] = \begin{bmatrix} 0 & \alpha & \beta & 0 \\ \alpha & 0 & 0 & -\beta \\ \beta & 0 & 0 & \alpha \\ 0 & -\beta & \alpha & 0 \end{bmatrix}$$

(14a) > $\alpha^2 + \beta^2 = 1$

Cazul 2

(11) si (13) > $\begin{cases} |S_{13}| = |S_{24}| \\ |S_{12}| = |S_{34}| \end{cases}$ Alegem: $S_{13} = S_{24} = \alpha \qquad S_{12} = S_{34} = j\beta$

(14a) > $\alpha^2 + \beta^2 = 1$

$$S_{13}^* S_{23} + S_{14}^* S_{24} = 0 \quad \Rightarrow \quad \alpha\left(S_{23} + S_{14}^*\right) = 0$$

$$S_{12}^* S_{23} + S_{14}^* S_{34} = 0 \quad \Rightarrow \quad \beta\left(S_{14}^* - S_{23}\right) = 0$$

$\longrightarrow$ $S_{14} = S_{23} = 0$ **Cuplor directional**

$$[S] = \begin{bmatrix} 0 & j\beta & \alpha & 0 \\ j\beta & 0 & 0 & \alpha \\ \alpha & 0 & 0 & j\beta \\ 0 & \alpha & j\beta & 0 \end{bmatrix}$$

$\downarrow$

$\alpha = \beta = 0$ **Caz banal**

CONCLUZIE

Orice circuit cu patru porti,
reciproc, fara pierderi si adaptat la toate portile
este un cuplor directional

Cuplor directional

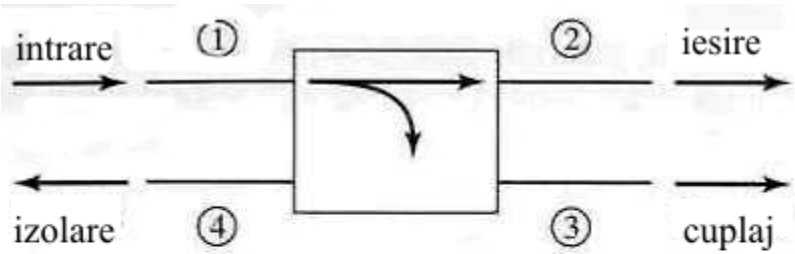

$$|S_{12}|^2 = \alpha^2 = 1 - \beta^2$$

$$|S_{13}|^2 = \beta^2$$

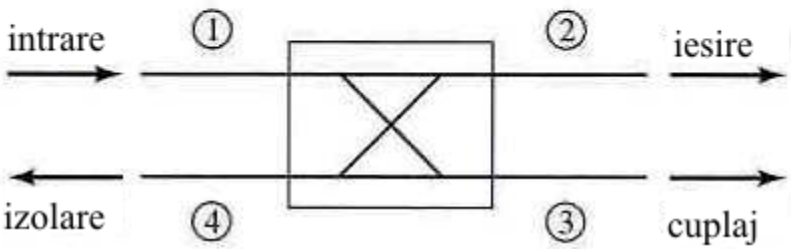

Cuplaj $= C = 10\log\frac{P_1}{P_3} = -20\log(\beta)\, dB$

Directivitate $= D = 10\log\frac{P_3}{P_4} = 20\log\left(\frac{\beta}{|S_{14}|}\right) dB$

Izolare $= I = 10\log\left(\frac{P_1}{P_4}\right) = -20\log|S_{14}|\, dB$

$$I = D + C\,,\ dB$$

Cuplor hibrid

Cuplorul hibrid este cuplorul directional de 3 dB

$$\alpha = \beta = 1/\sqrt{2}$$

Cuplor hibrid in cuadratura

$$(\theta = \phi = \pi/2)$$

$$[S] = \frac{1}{\sqrt{2}} \begin{bmatrix} 0 & 1 & j & 0 \\ 1 & 0 & 0 & j \\ j & 0 & 0 & 1 \\ 0 & j & 1 & 0 \end{bmatrix}$$

Cuplor hibrid in inel

$$(\theta = 0\,, \phi = \pi)$$

$$[S] = \frac{1}{\sqrt{2}} \begin{bmatrix} 0 & 1 & 1 & 0 \\ 1 & 0 & 0 & -1 \\ 1 & 0 & 0 & 1 \\ 0 & -1 & 1 & 0 \end{bmatrix}$$

Cuplorul hibrid în cuadratură (90°)

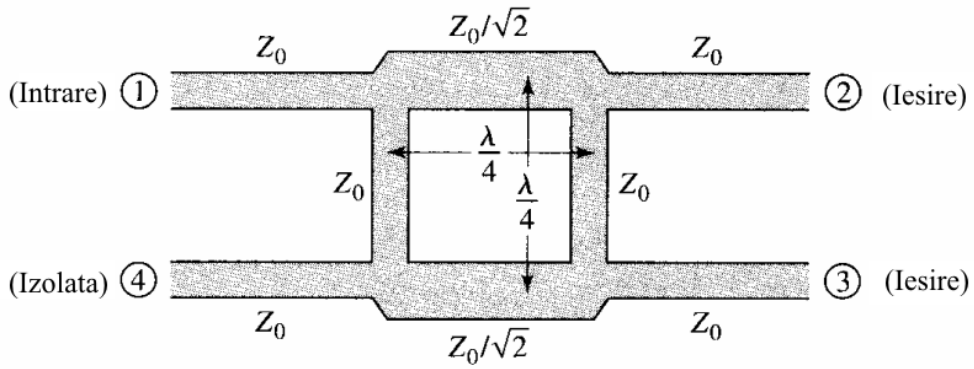

$$[S] = \frac{-1}{\sqrt{2}} \begin{bmatrix} 0 & j & 1 & 0 \\ j & 0 & 0 & 1 \\ 1 & 0 & 0 & j \\ 0 & 1 & j & 0 \end{bmatrix}$$

Simetria fizică se transformă în simetrie sau antisimetrie a câmpului electromagnetic

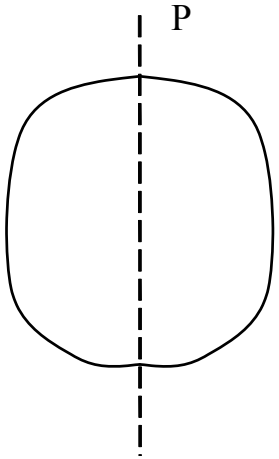

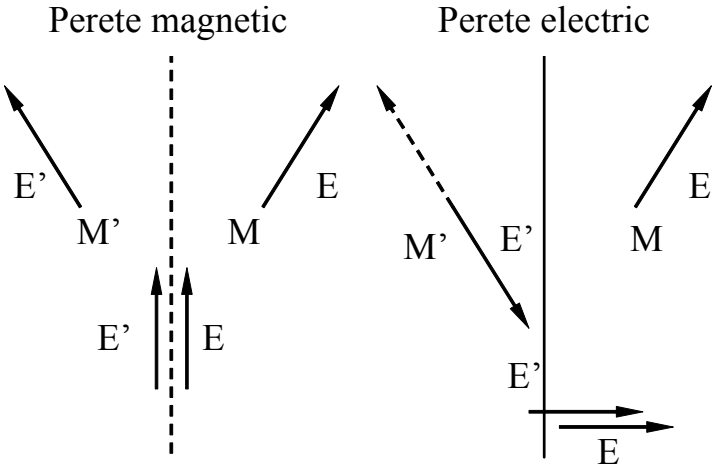

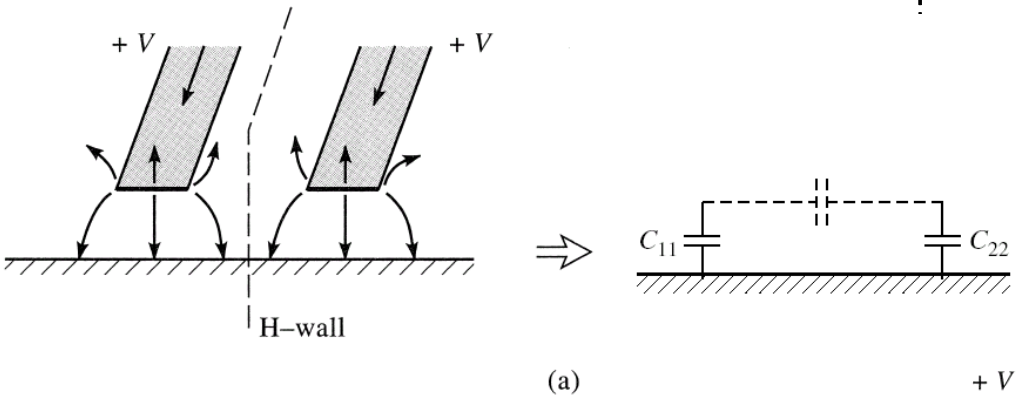

(a)

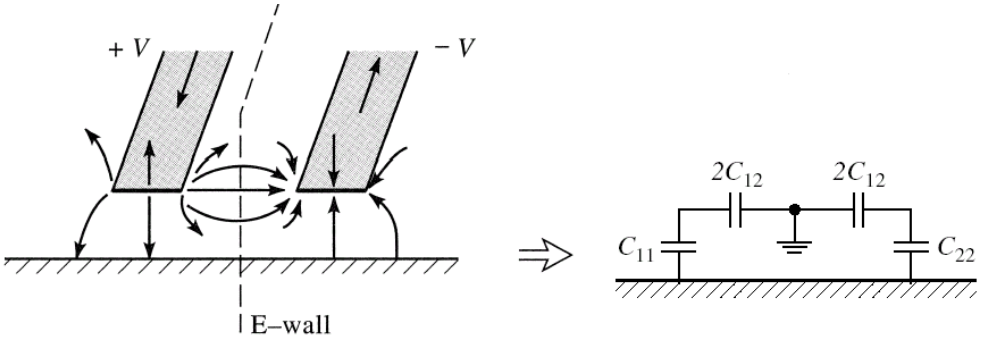

(b)

Analiza pe modul par-impar

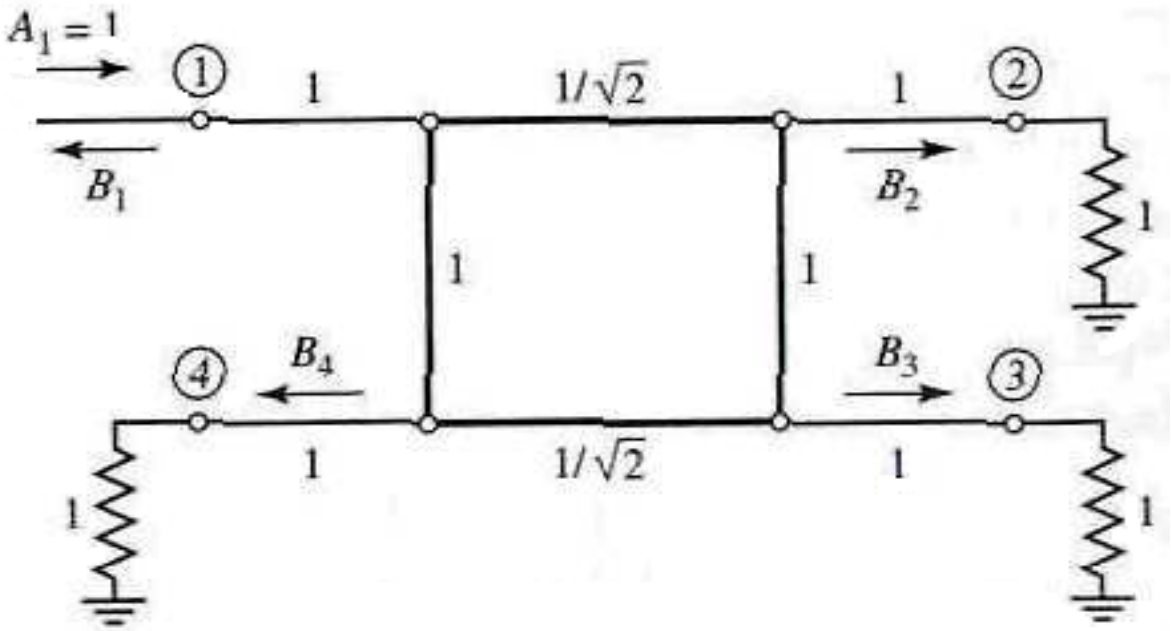

Analiza pe modul par-impar

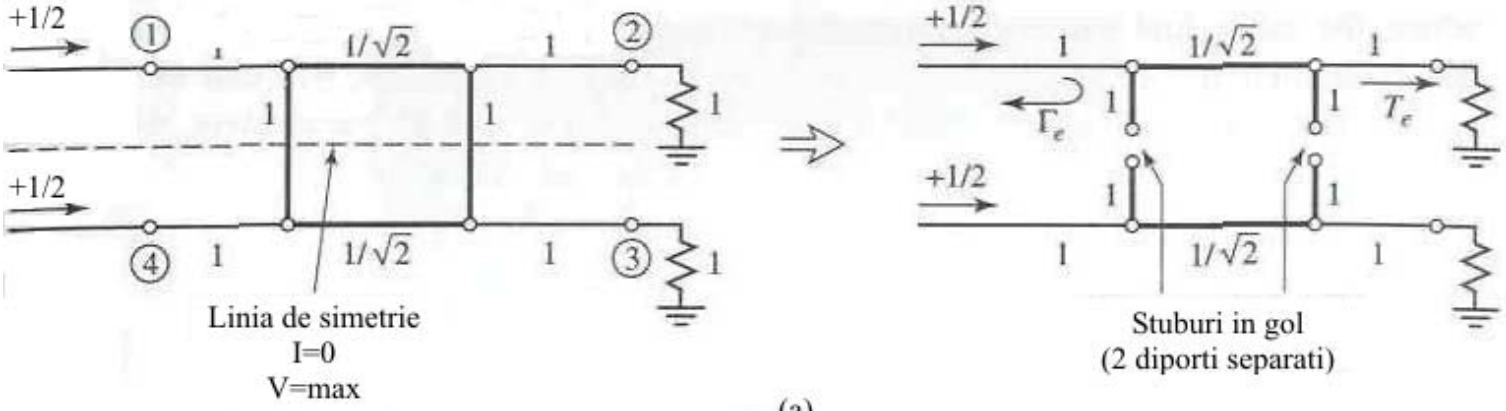

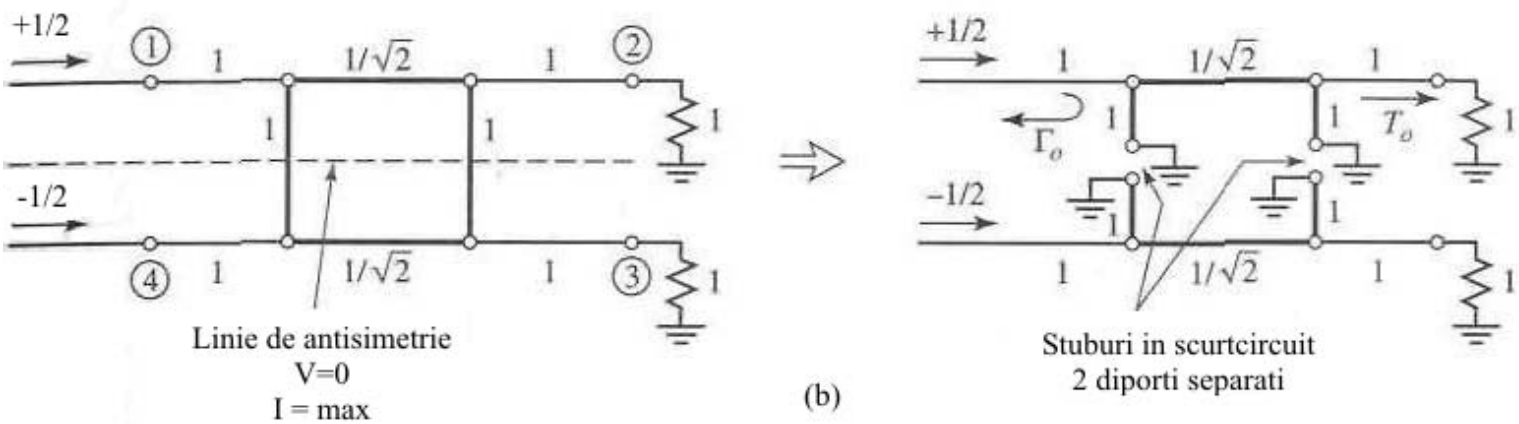

$$b_1 = \frac{1}{2}\Gamma_e + \frac{1}{2}\Gamma_o \qquad b_2 = \frac{1}{2}T_e + \frac{1}{2}T_o \qquad b_3 = \frac{1}{2}T_e - \frac{1}{2}T_o \qquad b_4 = \frac{1}{2}\Gamma_e - \frac{1}{2}\Gamma_o$$

Circuit	*ABCD* Parameters	
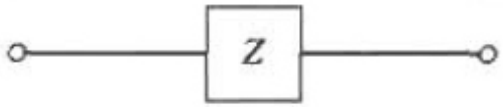	$A = 1$ $C = 0$	$B = Z$ $D = 1$
		
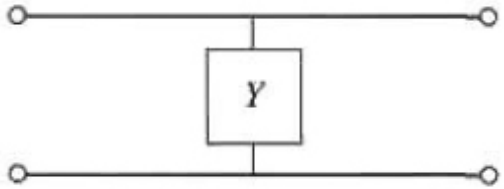	$A = 1$ $C = Y$	$B = 0$ $D = 1$
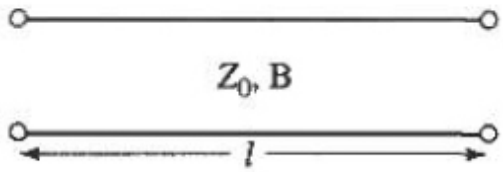	$A = \cos\beta\ell$ $C = jY_0 \sin\beta\ell$	$B = jZ_0 \sin\beta\ell$ $D = \cos\beta\ell$

Linie de transmisie cu impedanta de terminatie

$$Z_{in} = Z_0 \frac{(Z_L + Z_0)e^{j\beta\ell} + (Z_L - Z_0)e^{-j\beta\ell}}{(Z_L + Z_0)e^{j\beta\ell} - (Z_L - Z_0)e^{-j\beta\ell}}$$

$$= Z_0 \frac{Z_L \cos\beta\ell + jZ_0 \sin\beta\ell}{Z_0 \cos\beta\ell + jZ_L \sin\beta\ell}$$

$$= Z_0 \frac{Z_L + jZ_0 \tan\beta\ell}{Z_0 + jZ_L \tan\beta\ell}.$$

scurtcircuit

$$Z_{in} = jZ_0 \tan\beta\ell,$$

gol

$$Z_{in} = -jZ_0 \cot\beta\ell,$$

Calculul cuploarelor cu două trepte

$$Y'_S = \begin{cases} Y_1 & \text{pentru modul par} \\ -Y_1 & \text{pentru modul impar} \end{cases}$$

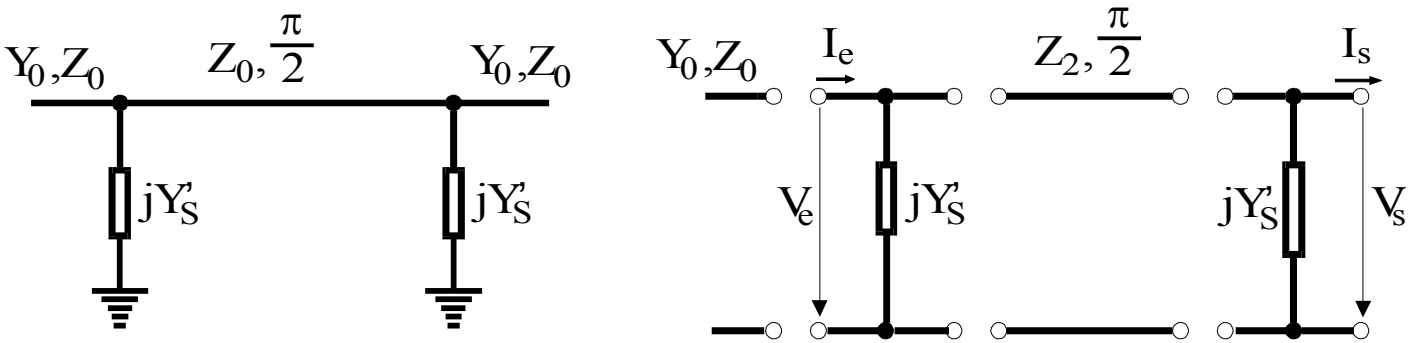

a) b)

$$\begin{bmatrix} V_e \\ I_e \end{bmatrix} = \begin{bmatrix} 1 & 0 \\ jY'_S & 1 \end{bmatrix} \cdot \begin{bmatrix} 0 & jZ_2 \\ jY_2 & 0 \end{bmatrix} \cdot \begin{bmatrix} 1 & 0 \\ jY'_S & 1 \end{bmatrix} \cdot \begin{bmatrix} V_S \\ I_S \end{bmatrix}$$

$$\begin{bmatrix} V_e \\ I_e \end{bmatrix} = \begin{bmatrix} -Y'_S Z_2 & jZ_2 \\ -jY'^2_S Z_2 + jY_2 & -Y'_S Z_2 \end{bmatrix} \cdot \begin{bmatrix} V_S \\ I_S \end{bmatrix}$$

$$S_{11} = \frac{j\frac{Z_2}{Z_0} - Z_0\left(-jY'^2_S Z_2 + jY_2\right)}{-2Y'_S Z_2 + j\frac{Z_2}{Z_0} + Z_0\left(-jY'^2_S + jY_2\right)}$$

$$S_{12} = \frac{2\left[\left(-Y'_S Z_2\right)^2 - jZ_2\left(-jY'^2_S Z_2 + jY_2\right)\right]}{-2Y'_S Z_2 + j\frac{Z_2}{Z_0} + Z_0\left(-jY'^2_S Z_2 + jY_2\right)}$$

$$\Gamma = S_{11} = \frac{j\left(z_2 - y_2 + y'^2_S z_2\right)}{-2y'_S z_2 + j\left(z_2 + y_2 - y'^2_S z_2\right)} = S_{22}$$

$$S_{21} = \frac{2}{-2Y'_S Z_2 + j\frac{Z_2}{Z_0} + Z_0\left(-jY'^2_S Z_2 + jY_2\right)}$$

$$S_{22} = \frac{j\frac{Z_2}{Z_0} - Z_0\left(-jY'^2_S Z_2 + jY_2\right)}{-2Y'_S Z_2 + j\frac{Z_2}{Z_0} + Z_0\left(-jY'^2_S Z_2 + jY_2\right)}$$

$$T = S_{21} = \frac{2}{-2y'_S z_2 + j\left(z_2 + y_2 - y'^2_S z_2\right)} = S_{12}$$

Legatura dintre parametrii S si parametrii ABCD

$$A = \sqrt{\frac{Z_{01}}{Z_{02}}}\,\frac{\left(1 + S_{11} - S_{22} - \Delta S\right)}{2S_{21}}$$

$$B = \sqrt{Z_{01}Z_{02}}\,\frac{\left(1 + S_{11} + S_{22} + \Delta S\right)}{2S_{21}}$$

$$C = \frac{1}{\sqrt{Z_{01}Z_{02}}}\,\frac{1 - S_{11} - S_{22} + \Delta S}{2S_{21}}$$

$$D = \sqrt{\frac{Z_{02}}{Z_{01}}}\,\frac{1 - S_{11} + S_{22} - \Delta S}{2S_{21}}$$

$$\Delta S = S_{11}S_{22} - S_{12}S_{21}$$

$$S_{11} = \frac{AZ_{02} + B - CZ_{01}Z_{02} - DZ_{01}}{AZ_{02} + B + CZ_{01}Z_{02} + DZ_{01}}$$

$$S_{12} = \frac{2(AD - BC)\sqrt{Z_{01}Z_{02}}}{AZ_{02} + B + CZ_{01}Z_{02} + DZ_{01}}$$

$$S_{21} = \frac{2\sqrt{Z_{01}Z_{02}}}{AZ_{02} + B + CZ_{01}Z_{02} + DZ_{01}}$$

$$S_{22} = \frac{-AZ_{02} + B - CZ_{01}Z_{02} + DZ_{01}}{AZ_{02} + B + CZ_{01}Z_{02} + DZ_{01}}$$

Adaptarea cuplorului si coeficientul de cuplaj

$$\Gamma_e = \frac{j\cdot\left(z_2 - y_2 + y_1^2 z_2\right)}{-2y_1 z_2 + j\left(z_2 + y_2 - y_1^2 z_2\right)}$$

$$\Gamma_o = \frac{j\cdot\left(z_2 - y_2 + y_1^2 z_2\right)}{2y_1 z_2 + j\left(z_2 + y_2 - y_1^2 z_2\right)}$$

$$T_e = \frac{2}{-2y_1 z_2 + j\cdot\left(z_2 + y_2 - y_1^2 z_2\right)}$$

$$T_o = \frac{2}{2y_1 z_2 + j\cdot\left(z_2 + y_2 - y_1^2 z_2\right)}$$

$$b_1 = \frac{\Gamma_e + \Gamma_o}{2} = \frac{z_2^2 - \left(y_2 - y_1^2 z_2\right)^2}{(2y_1 z_2)^2 + \left(z_2 + y_2 - y_1^2 z_2\right)^2}$$

$$b_2 = \frac{T_e + T_o}{2} = \frac{-2j\left(z_2 + y_2 - y_1^2 z_2\right)}{(2y_1 z_2)^2 + \left(z_2 + y_2 - y_1^2 z_2\right)^2}$$

$$b_3 = \frac{T_e - T_o}{2} = \frac{-4y_1 z_2}{(2y_1 z_2)^2 + \left(z_2 + y_2 - y_1^2 z_2\right)^2}$$

$$b_4 = \frac{\Gamma_e - \Gamma_o}{2} = \frac{-2jy_1 z_2\left(z_2 - y_2 + y_1^2 z_2\right)}{(2y_1 z_2)^2 + \left(z_2 + y_2 - y_1^2 z_2\right)^2}$$

$$b_1 = 0 \Rightarrow z_2 - y_2 + y_1^2 z_2 = 0 \Rightarrow z_2^2 = \frac{1}{1 + y_1^2}$$

$$\boxed{y_2^2 = 1 + y_1^2}$$

$$\boxed{C = 10\log\frac{P_1}{P_3} = -20\log|b_3|\ , dB}$$

$$b_1 = 0\ b_4 = 0\ b_3 = -y_1 z_2\ \ b_2 = -jz_2$$

$$b_3 = -\frac{\sqrt{y_2^2 - 1}}{y_2}\ ,\ b_2 = -\frac{j}{y_2}$$

$$\boxed{C = \frac{\sqrt{y_2^2 - 1}}{y_2}}$$

$$b_3 = -C$$

$$b_2 = -j\sqrt{1 - C^2}$$

$$[S] = \begin{bmatrix} 0 & -j\sqrt{1-C^2} & -C & 0 \\ -j\sqrt{1-C^2} & 0 & 0 & -C \\ -C & 0 & 0 & -j\sqrt{1-C^2} \\ 0 & -C & -j\sqrt{1-C^2} & 0 \end{bmatrix}$$

Exemplu

Proiectați un cuplor în scară pe impedanța caracteristică de 50 Ω, şi reprezentati mărimea parametrilor S între

$0.5 f_0$ şi $1.5 f_0$, unde f_0

este frecvența de proiectare la care liniile cuplorului sunt de lungime $\lambda/4$

.

Solutie

Un cuplor în scară cu C = 3dB, are $C = 1/\sqrt{2}$

. Atunci $y_2 = \sqrt{2}$ şi $y_1 = 1$

. Astfel matricea S din relația (&.47) devine cea din relația (&.38). În plus, pentru $Z_0 = 50\Omega$

, impedanțele caracteristice ale liniilor cuplorului vor fi:

$$Z_1 = Z_0 = 50\Omega \qquad Z_2 = \frac{Z_0}{\sqrt{2}} = 35.4\Omega$$

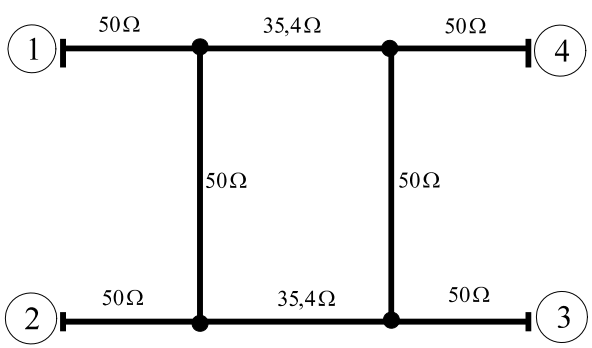

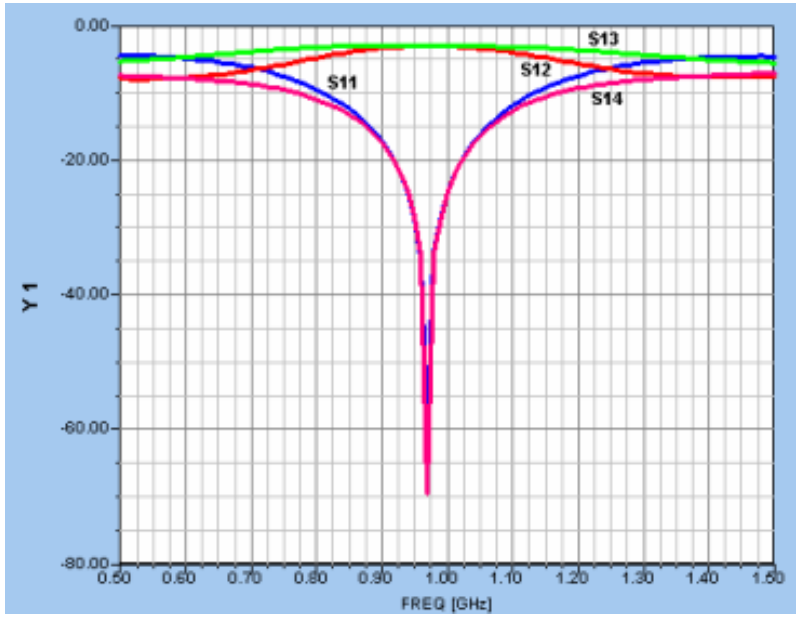

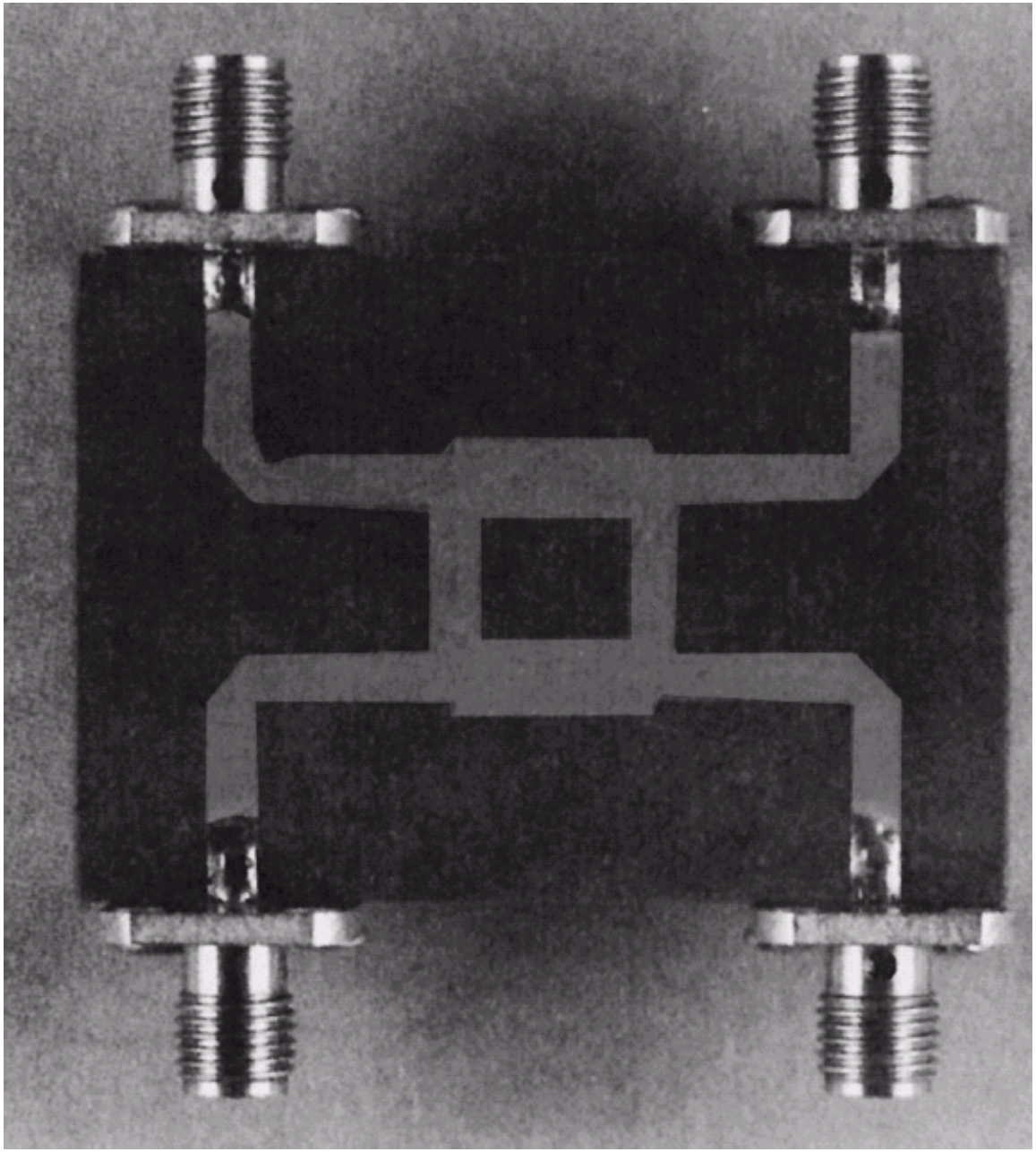

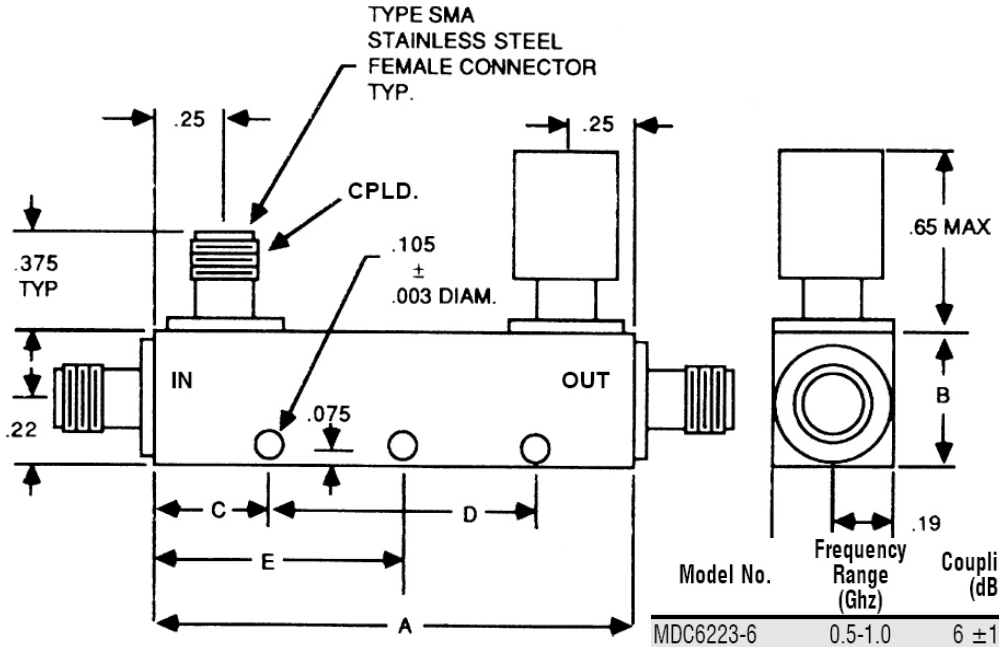

Model No.	Frequency Range (Ghz)	Coupling † (dB)	Freq. Sens. (dB)	Insertion Loss (dB)		Directivity (dB min.)	VSWR max.	
				Excl. Cpld Pwr	True		Primary Line	Secondary Line
MDC6223-6	0.5-1.0	6 ±1.00	±0.60	0.20	1.80	25	1.15	1.15
MDC6223-10	0.5-1.0	10 ±1.25	±0.75	0.20	0.80	25	1.10	1.10
MDC6223-20	0.5-1.0	20 ±1.25	±0.75	0.15	0.20	25	1.10	1.10
MDC6223-30	0.5-1.0	30 ±1.25	±0.75	0.15	0.20	25	1.10	1.10
MDC6224-6	1.0-2.0	6 ±1.00	±0.60	0.20	1.80	25	1.15	1.15
MDC6224-10	1.0-2.0	10 ±1.25	±0.75	0.20	0.80	25	1.10	1.10
MDC6224-20	1.0-2.0	20 ±1.25	±0.75	0.15	0.20	25	1.10	1.10
MDC6224-30	1.0-2.0	30 ±1.25	±0.75	0.15	0.20	25	1.10	1.10
MDC6225-6	2.0-4.0	6 ±1.00	±0.60	0.20	1.80	22	1.15	1.15
MDC6225-10	2.0-4.0	10 ±1.25	±0.75	0.20	0.80	22	1.15	1.15
MDC6225-20	2.0-4.0	20 ±1.25	±0.75	0.15	0.20	22	1.15	1.15
MDC6225-30	2.0-4.0	30 ±1.25	±0.75	0.15	0.20	22	1.15	1.15
MDC6266-6	2.6-5.2	6 ±1.00	±0.60	0.20	1.80	20	1.25	1.25
MDC6266-10	2.6-5.2	10 ±1.25	±0.75	0.20	0.80	20	1.25	1.25
MDC6266-20	2.6-5.2	20 ±1.25	±0.75	0.20	0.25	20	1.25	1.25
MDC6266-30	2.6-5.2	30 ±1.25	±0.75	0.20	0.20	20	1.25	1.25
MDC6226-6	4.0-8.0	6 ±1.00	±0.60	0.25	1.90	20	1.25	1.25
MDC6226-10	4.0-8.0	10 ±1.25	±0.75	0.25	0.90	20	1.25	1.25
MDC6226-20	4.0-8.0	20 ±1.25	±0.75	0.25	0.30	20	1.25	1.25
MDC6226-30	4.0-8.0	30 ±1.25	±0.75	0.25	0.25	20	1.25	1.25
MDC6227-6	7.0-12.4	6 ±1.00	±0.50	0.30	2.00	17	1.30	1.30
MDC6227-10	7.0-12.4	10 ±1.00	±0.50	0.30	1.00	17	1.30	1.30
MDC6227-20	7.0-12.4	20 ±1.00	±0.50	0.30	0.35	17	1.30	1.30

Cuplorul prin proximitate

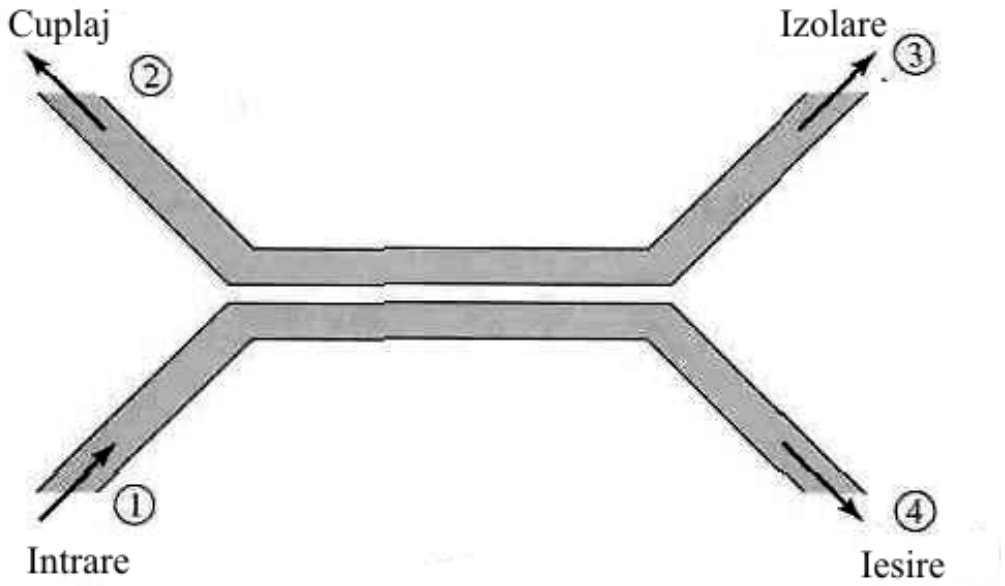

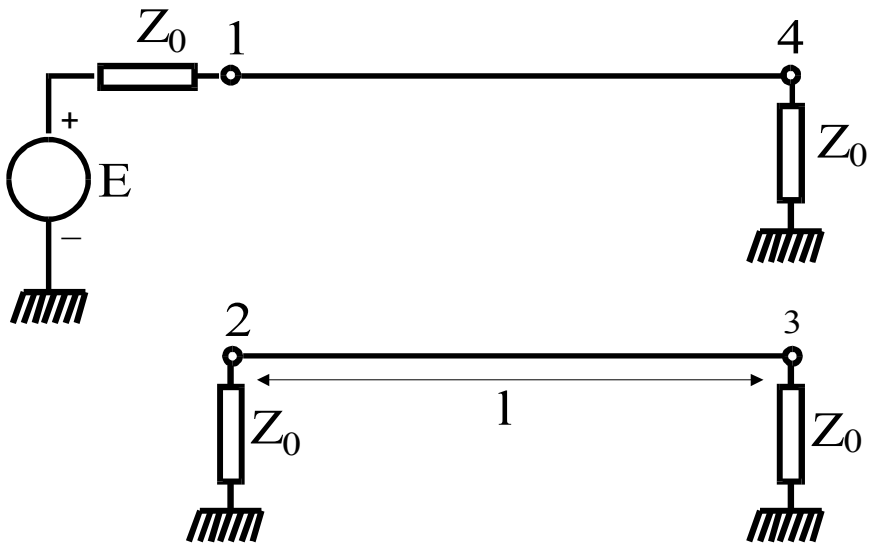

Adaptarea cuplorului prin proximitate

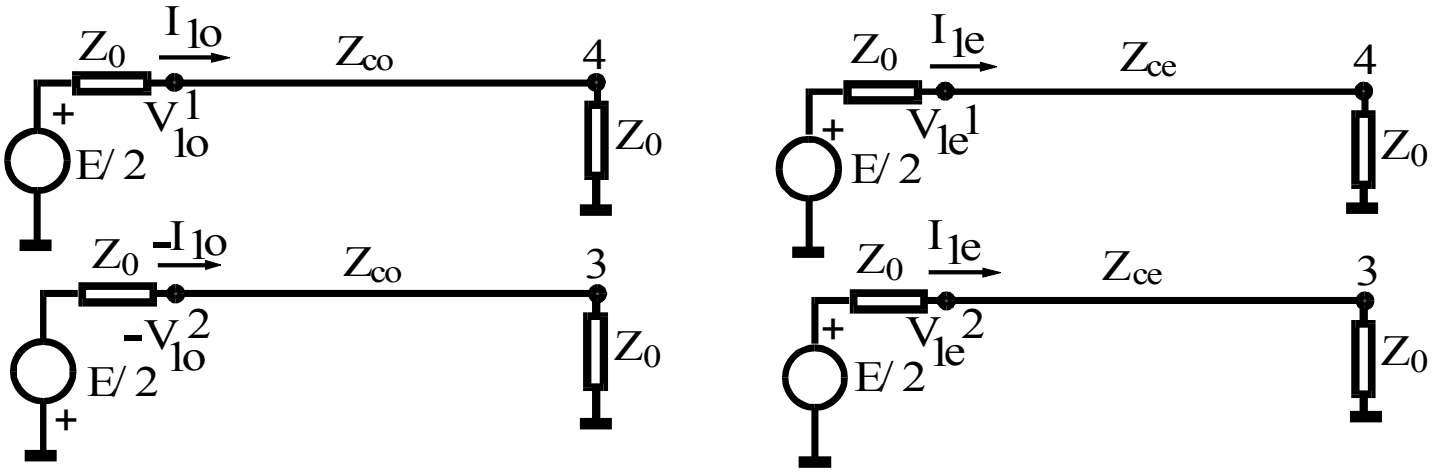

$$\begin{cases} Z_{ce} Z_{co} = Z_0^2 \\ \theta_e = \theta_o \end{cases}$$

Directivitatea şi coeficientul de cuplaj ale cuplorului prin proximitate

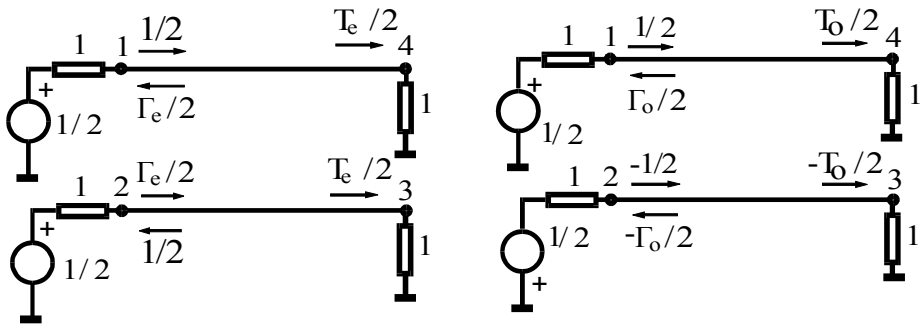

$$a_1 = a_{1e} + a_{1o} = 1\,,\; a_2 = a_3 = a_4 = 0$$

$$b_1 = \frac{1}{2}(\Gamma_e + \Gamma_o) = 0 \Leftrightarrow$$

$$b_2 = \frac{1}{2}(\Gamma_e - \Gamma_o) = \frac{jC\sin(\theta)}{\cos(\theta)\sqrt{1-C^2} + j\sin(\theta)}$$

$$\boxed{\theta = \pi/2}$$

$$b_3 = \frac{1}{2}(T_e - T_o) = 0$$

$$b_4 = \frac{1}{2}(T_e + T_o) = \frac{\sqrt{1-C^2}}{\cos(\theta)\sqrt{1-C^2} + j\sin(\theta)}$$

$$\boxed{C = \frac{Z_{ce} - Z_{co}}{Z_{ce} + Z_{co}}}$$

$$\boxed{[S] = \begin{bmatrix} 0 & C & 0 & -j\sqrt{1-C^2} \\ C & 0 & -j\sqrt{1-C^2} & 0 \\ 0 & -j\sqrt{1-C^2} & 0 & C \\ -j\sqrt{1-C^2} & 0 & C & 0 \end{bmatrix}}$$

Cuplor prin proximitate

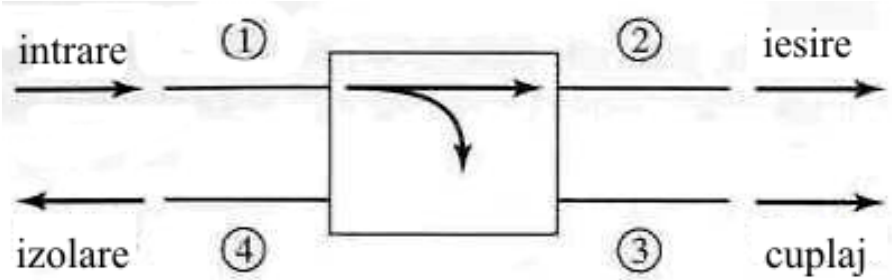

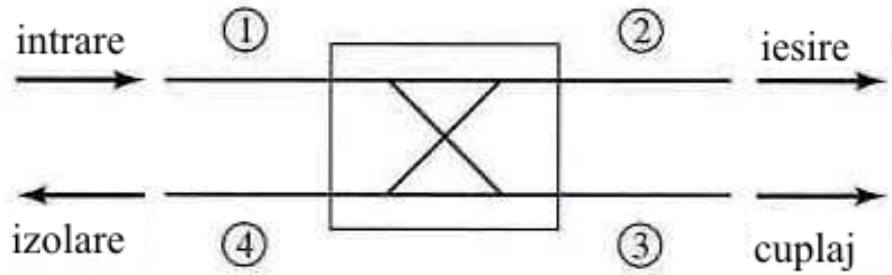

$$[S] = -j \cdot \begin{bmatrix} 0 & \sqrt{1-C^2} & jC & 0 \\ \sqrt{1-C^2} & 0 & 0 & jC \\ jC & 0 & 0 & \sqrt{1-C^2} \\ 0 & jC & \sqrt{1-C^2} & 0 \end{bmatrix}$$

$$[\mathrm{S}] = \frac{1}{\sqrt{2}} \begin{bmatrix} 0 & 1 & \mathrm{j} & 0 \\ 1 & 0 & 0 & \mathrm{j} \\ \mathrm{j} & 0 & 0 & 1 \\ 0 & \mathrm{j} & 1 & 0 \end{bmatrix}$$

Normalized even- and odd-mode characteristic impedance design data for edge-coupled striplines.

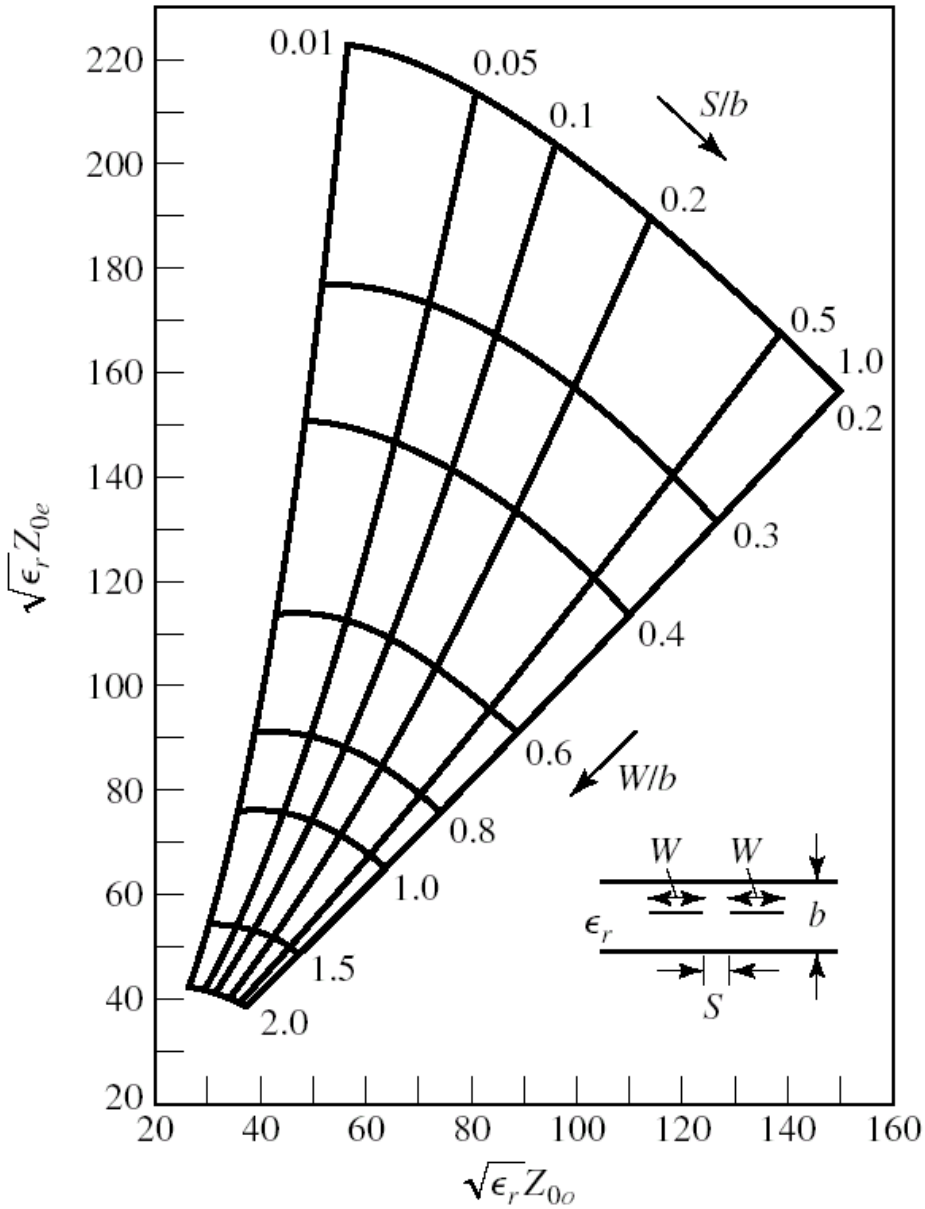

Even- and odd-mode characteristic impedance design data for coupled microstrip lines on a substrate with $\varepsilon_r = 10$.

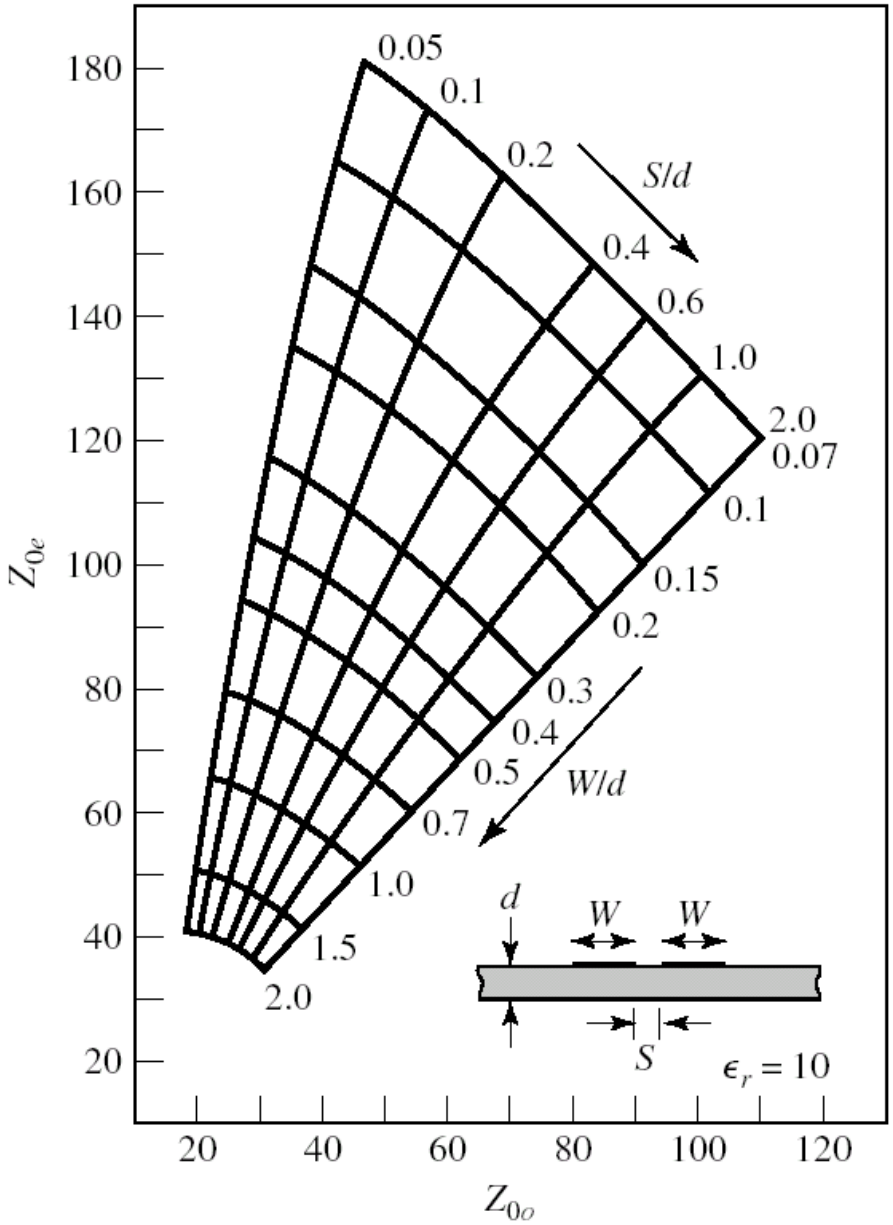

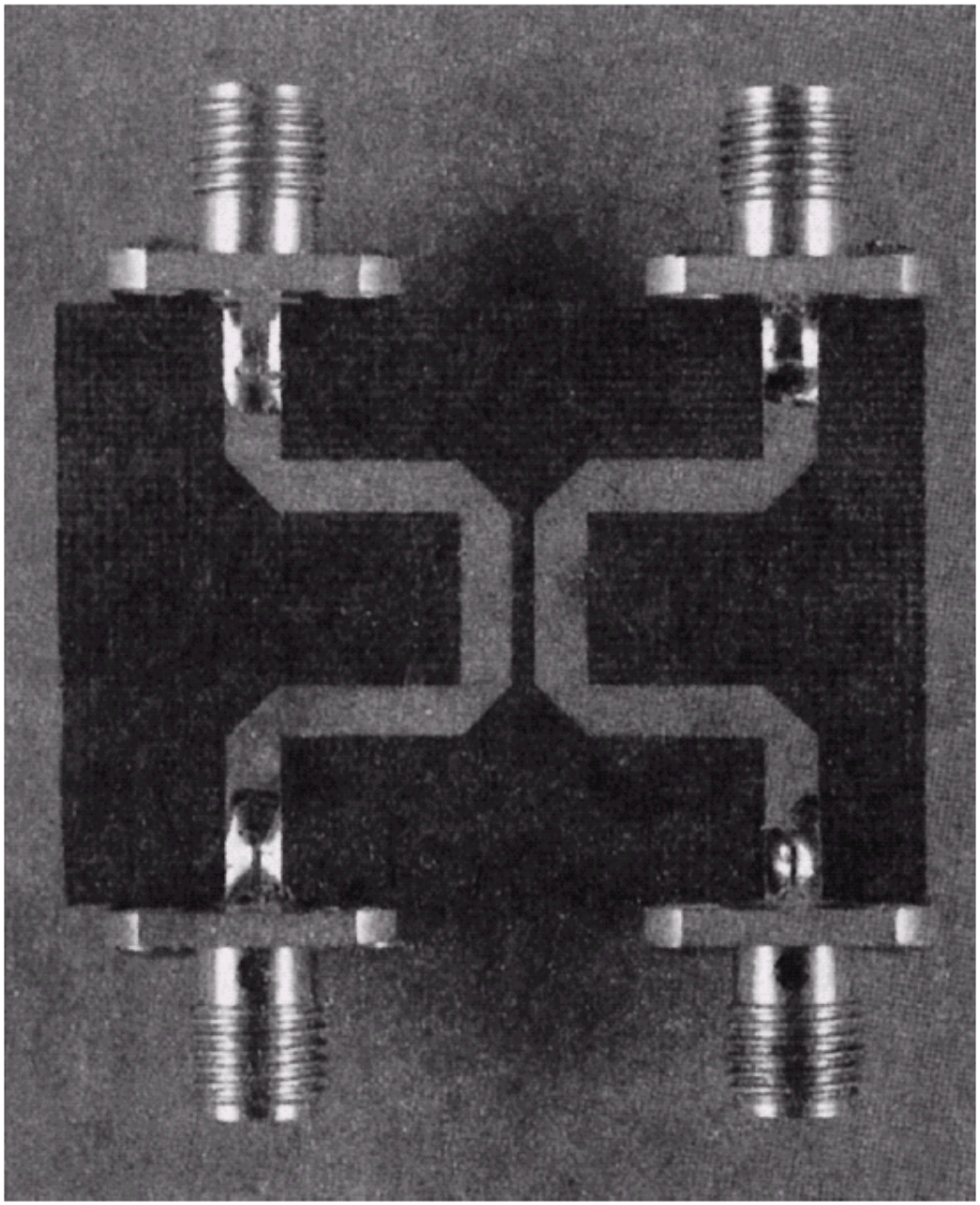

Exemplu

Proiectați un cuplor prin proximitate de 20 dB, în tehnologie stripline, folosind o distanta între planele de masă de 0.158 cm şi cu o permitivitate electrică relativa de 2.56, pe o impedanța de 50 Ω, la frecvența de 3 GHz. Reprezentați cuplajul şi directivitatea între 1 si 5 GHz.

Soluție

$$C = 10^{-20/20} = 0.1$$

$$Z_{co} = 50\sqrt{\frac{0.9}{1.1}} = 45.23\Omega$$

$$Z_{ce} = 50\sqrt{\frac{1.1}{0.9}} = 55.28\Omega$$

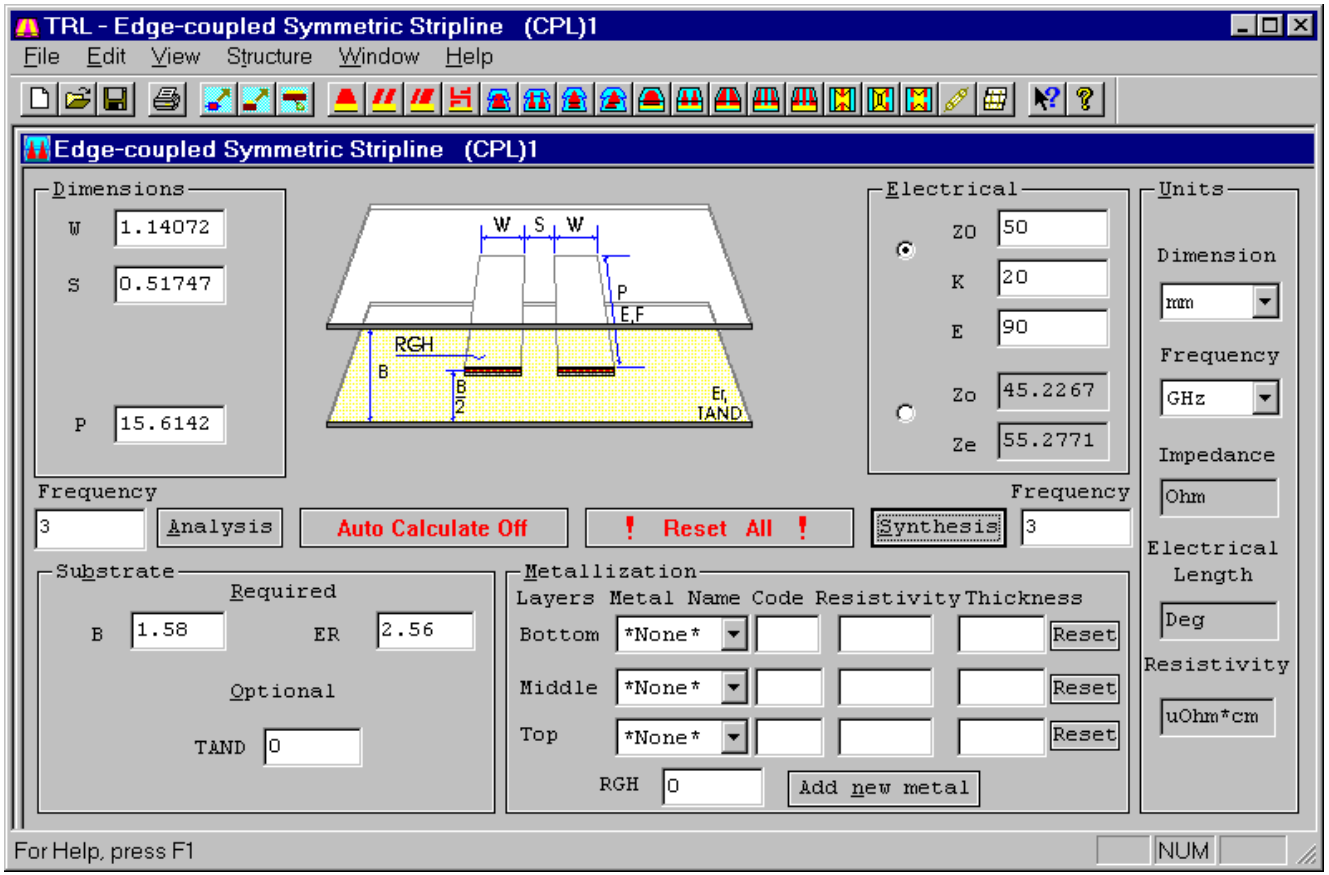

$$Z_{ce} = Z_0\sqrt{\frac{1+C}{1-C}}\ ,\ Z_{co} = Z_0\sqrt{\frac{1-C}{1+C}}$$

Simulare

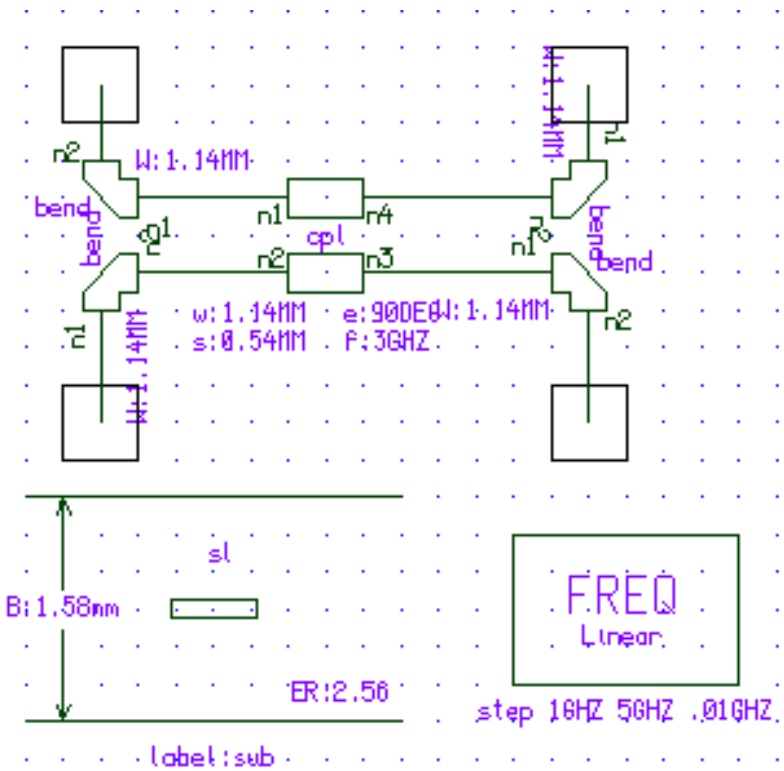
W:1.14MM
bend
n1
n4
cpl
n2
n3
w:1.14MM
s:0.54MM
e:90DEG
W:1.14MM
F:3GHZ
sl
B:1.58mm
ER:2.56
FREQ
Linear
step 1GHZ 5GHZ .01GHZ
label:sub

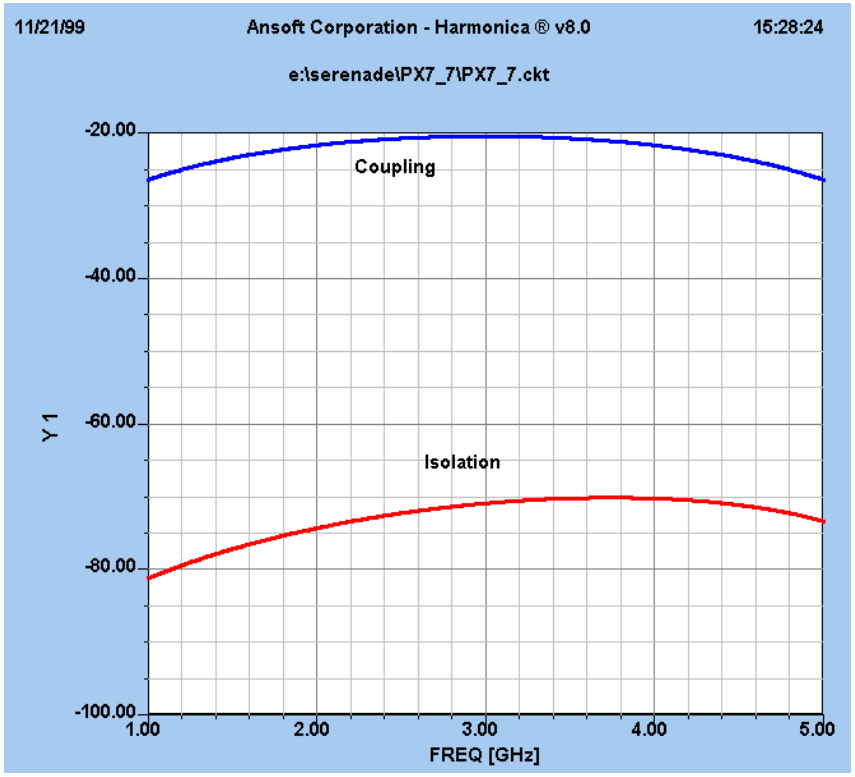
11/21/99
Ansoft Corporation - Harmonica ® v8.0
15:28:24
e:\serenade\PX7_7\PX7_7.ckt
Coupling
Isolation
Y1
-20.00
-40.00
-60.00
-80.00
-100.00
1.00
2.00
3.00
4.00
5.00
FREQ [GHz]

Cuplor prin proximitate cu mai multe secțiuni

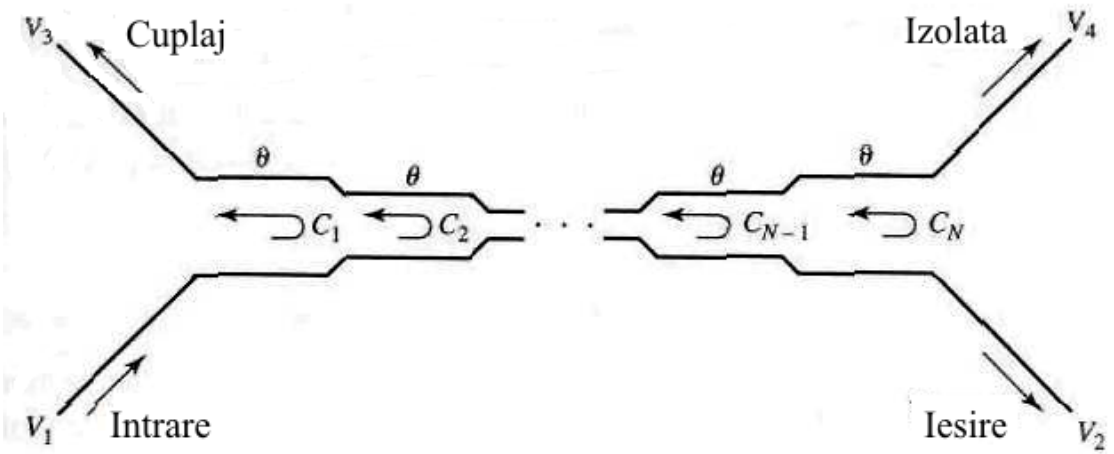

C<<1

$$\frac{V_3}{V_1} = b_3 = \frac{jC\sin\theta}{\cos\theta\sqrt{1-C^2} + j\sin\theta} = \frac{jCtg\theta}{\sqrt{1-C^2} + jtg\theta} \approx \frac{jCtg\theta}{1+jtg\theta} = jC\sin\theta e^{-j\theta}$$

$$\frac{V_2}{V_1} = b_2 = \frac{\sqrt{1-C^2}}{\cos\theta\sqrt{1-C^2} + j\sin\theta} \approx \frac{1}{\cos\theta + j\sin} = e^{-j\theta}$$

$$C = \frac{V_3}{V_1} = 2j\sin\theta e^{-j\theta} e^{-j(N-1)\theta}\left[C_1\cos(N-1)\theta + C_2\cos(N-3)\theta + \ldots + \frac{1}{2}C_{\frac{N+1}{2}}\right]$$

Exemplu

Să se proiecteze un cuplor cu trei secțiuni, avînd un cuplaj de 20 dB, cu caracteristică binomiala (maxim plat), pe o impedanță de 50 Ω, la frecvența centrală de 3 GHz. Să se reprezinte grafic cuplajul şi directivitatea între 1 şi 5 GHz.

Solutie

$$(N=3) \qquad C_0 = 20\,dB \qquad \theta = \pi/2$$

$$\left.\frac{d^n}{d\theta^n} C(\theta)\right|_{\theta=\pi/2} = 0,\ n = 1,2$$

$$C = \left|\frac{V_3}{V_1}\right| = 2\sin\theta\left[C_1\cos 2\theta + \frac{1}{2}C_2\right] = C_1(\sin 3\theta - \sin\theta) + C_2\sin\theta$$

$$\frac{dC}{d\theta} = \left[3C_1\cos 3\theta + (C_2 - C_1)\cos\theta\right]\Big|_{\theta=\pi/2} = 0$$

$$\frac{d^2C}{d\theta^2} = \left[-9C_1\sin 3\theta - (C_2 - C_1)\sin\theta\right]\Big|_{\theta=\pi/2} = 10C_1 - C_2 = 0$$

$$\begin{cases} C_2 - 2C_1 = 0.1 \\ 10C_1 - C_2 = 0 \end{cases}$$

$$\begin{cases} C_1 = C_3 = 0.0125 \\ C_2 = 0.125 \end{cases}$$

$$Z_{0e}^1 = Z_{0e}^3 = 50\sqrt{\frac{1.0125}{0.9875}} = 50.63\,\Omega$$

$$Z_{0o}^1 = Z_{0o}^3 = 50\sqrt{\frac{0.9875}{1.0125}} = 49.38\,\Omega$$

$$Z_{0e}^2 = 50\sqrt{\frac{1.125}{0.875}} = 56.69\,\Omega$$

$$Z_{0o}^2 = 50\sqrt{\frac{0.875}{1.125}} = 44.10\,\Omega$$

Simulare

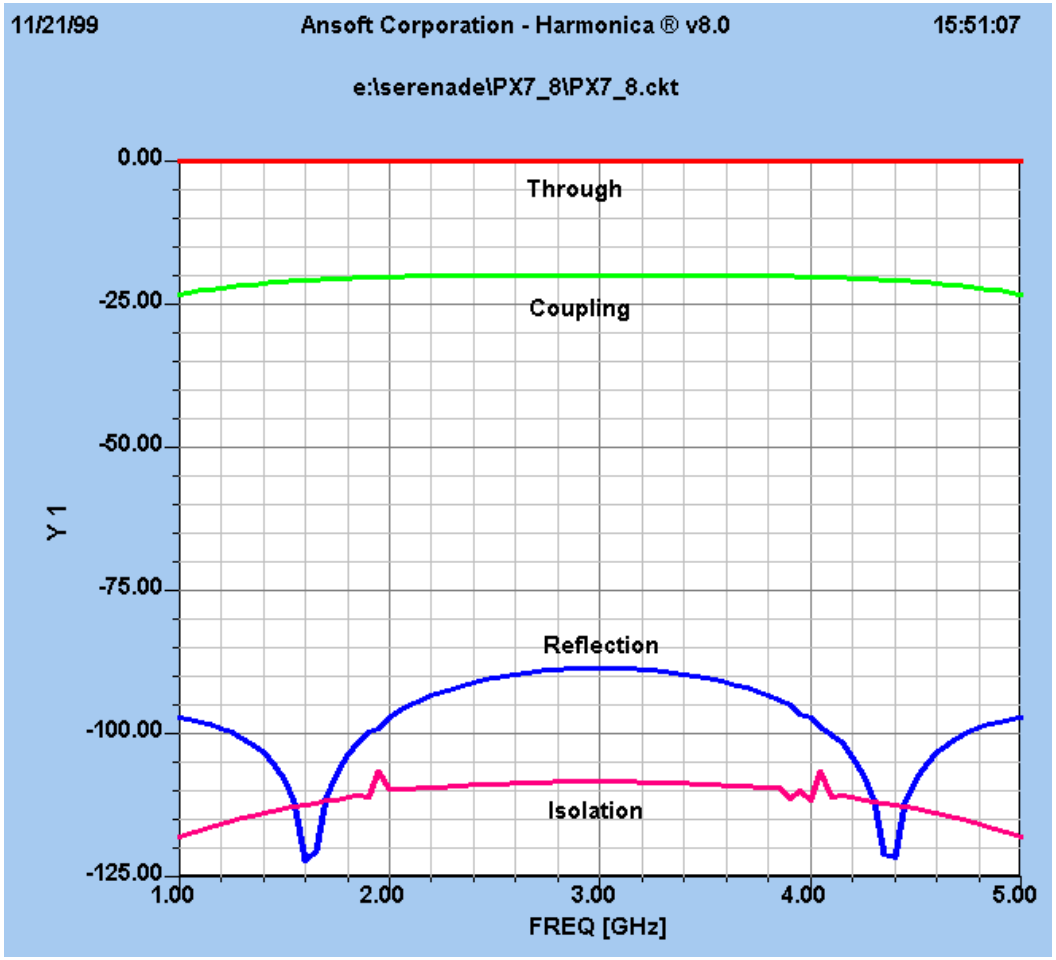
11/21/99
Ansoft Corporation - Harmonica ® v8.0
15:51:07
e:\serenade\PX7_8\PX7_8.ckt
0.00
-25.00
-50.00
-75.00
-100.00
-125.00
Y 1
Through
Coupling
Reflection
Isolation
1.00
2.00
3.00
4.00
5.00
FREQ [GHz]